OWNER INFORMATION

PAUL, IAN
PAUL, STEPHANIE A
4 EXETER RD

KINGSTON, NH 03848

SALES HISTORY

Date	Book	Page	Type	Price	Grantor
07/30/1999	3411	1640	Q I	150,000	MAILLOUX

PICTURE

LISTING HISTORY

03/02/15	KCPU
06/12/12	KCML
05/07/03	SH O

NOTES

TAN, WATER IN BASEMENT, SUMP PUMP, ADD BME & DEKS 6/12KC

EXTRA FEATURES VALUATION

Feature Type	Units	Lngth x Width	Size Adj	Rate	Cond	Market Value	Notes
FIREPLACE 1-1	1		100	3,000.00	100	3,000	
						3,000	

MUNICIPAL SOFTWARE BY AVITAR

KINGSTON ASSESSING OFFICE

PARCEL TOTAL TAXABLE VALUE

Year	Building	Features	Land
2014	$ 125,800	$ 3,000	$ 72,500
		Parcel Total:	$ 201,300
2015	$ 125,800	$ 3,000	$ 72,500
		Parcel Total:	$ 201,300
2016	**$ 125,800**	**$ 3,000**	**$ 72,500**
		Parcel Total:	**$ 201,300**

LAND VALUATION

Zone: SFAGA SFR AGR AQUIFE **Minimum Acreage:** 3.00 **Minimum Frontage:** 200 **Site:** **Driveway:** **Road:**

Land Type	Units	Base Rate	NC	Adj	Site	Road	DWay	Topography	Cond	Ad Valorem	SPI	R	Tax Value	Notes
1F RES	0.500 ac	72,500	E	100	100	100	100		100	72,500	0	N	72,500	
	0.500 ac									72,500			**72,500**	

Map: 000R34 **Lot: 000055** **Sub: 000000** **Card: 1 of 1** **4 EXETER RD** **KINGSTON** **Printed: 07/22/2016**

PICTURE

OWNER

PAUL, IAN
PAUL, STEPHANIE A
4 EXETER RD

KINGSTON, NH 03848

TAXABLE DISTRICTS

District	Percentage

PERMITS

Date	Permit ID	Permit Type	Notes
05/06/14	CA20141173	SEPTIC	APPROVAL FOR CONSTRU
05/06/14	CA20141173	SEPTIC	APPROVAL FOR OPERATIC
03/19/14	CA20131162	SEPTIC	90-DAY EXTENSION ON 12/
12/19/13	CA20131162	SEPTIC	APPROVAL FOR CONSTRU
11/05/13	CA20131157	SEPTIC	APPROVAL FOR CONSTRU
10/24/13	R34-55	WELL	DES WELL RELEASE
04/06/07	R34-55	ALTERATION	REMODEL 2 BATHROOMS

BUILDING DETAILS

Model: **1.75 STORY FRAME CAPE**
Roof: **GABLE HIP/ASPHALT**
Ext: **VINYL SIDING**
Int: **DRYWALL**
Floor: **HARDWOOD/CARPET**
Heat: **OIL/FA DUCTED**
Bedrooms: **3** Baths: **2.0** Fixtures:
Extra Kitchens: Fireplaces:
A/C: **No** Generators:
Quality: **A0 AVG**
Com. Wall:
Size Adj: **0.9803** Base Rate: **RSA 80.00**
Bldg. Rate: **0.9511**
Sq. Foot Cost: **$ 76.09**

BUILDING SUB AREA DETAILS

ID	Description	Area	Adj.	Effect.
TQF	3/4 STRY FIN	768	0.75	576
FFF	FST FLR FIN	1023	1.00	1023
BMU	BSMNT	768	0.15	115
DEK	DECK/ENTRANCE	420	0.10	42
GAR	GARAGE	720	0.45	324
BME	BSMT ENTRY	36	0.35	13
GLA:	**1,599**	**3,735**		**2,093**

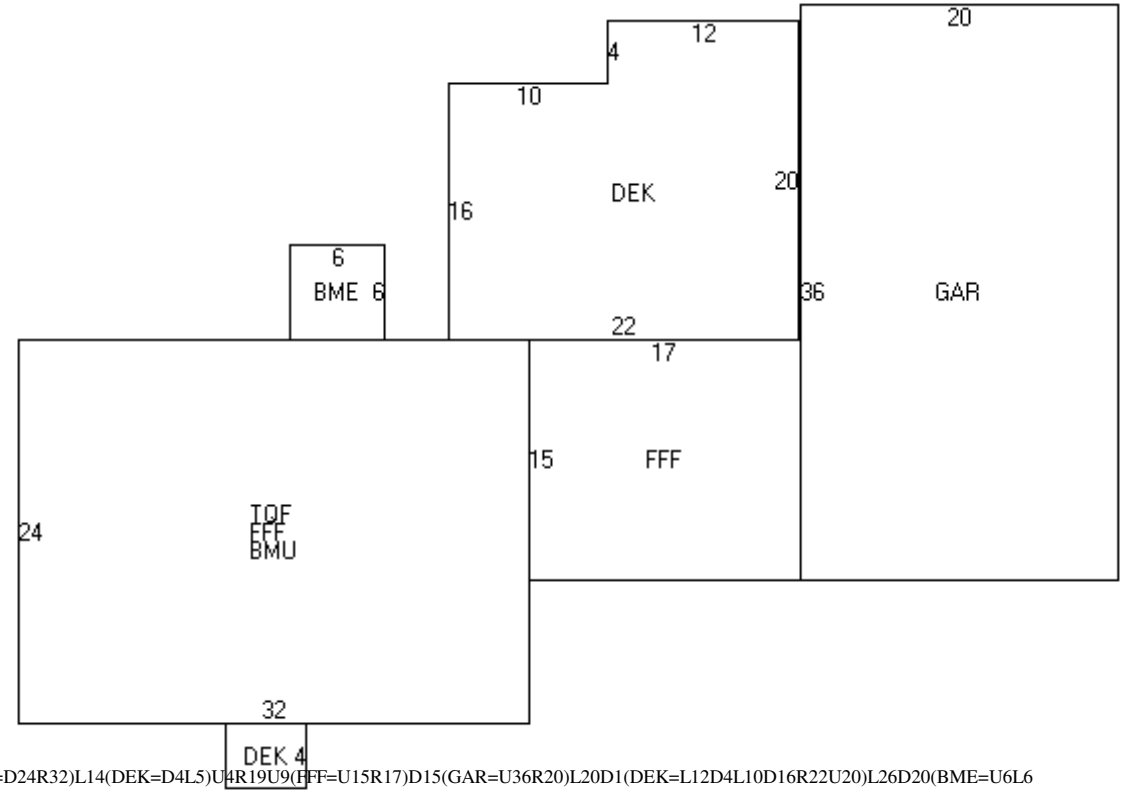

(TQF,FFF,BMU=D24R32)L14(DEK=D4L5)U4R19U9(FFF=U15R17)D15(GAR=U36R20)L20D1(DEK=L12D4L10D16R22U20)L26D20(BME=U6L6
)

2013 BASE YEAR BUILDING VALUATION

Market Cost New: **$ 159,256**
Year Built: **1945**
Condition For Age: AVERAGE **21 %**
Physical:
Functional:
Economic:
Temporary:
Total Depreciation: **21 %**

Building Value: **$ 125,800**

OWNER INFORMATION

GETCHELL, ALICE G.

P.O.BOX 306

KINGSTON, NH 03848-0306

SALES HISTORY

Date	Book	Page	Type	Price	Grantor
09/01/2004	4355	2191	U I 38		GETCHELL

PICTURE

LISTING HISTORY

06/12/12 KCM
05/07/03 SH O

NOTES

GREY, WATER IN BASEMENT

EXTRA FEATURES VALUATION

Feature Type	Units	Lngth x Width	Size Adj	Rate	Cond	Market Value	Notes

MUNICIPAL SOFTWARE BY AVITAR

KINGSTON ASSESSING OFFICE

PARCEL TOTAL TAXABLE VALUE

Year	Building	Features	Land
2014	$ 127,700	$ 0	$ 72,500
		Parcel Total:	$ 200,200
2015	$ 127,700	$ 0	$ 72,500
		Parcel Total:	$ 200,200
2016	**$ 127,700**	**$ 0**	**$ 72,500**
		Parcel Total:	**$ 200,200**

LAND VALUATION

Zone: SFAGA SFR AGR AQUIFE **Minimum Acreage:** 3.00 **Minimum Frontage:** 200 **Site:** **Driveway:** **Road:**

Land Type	Units	Base Rate	NC	Adj	Site	Road	DWay	Topography	Cond	Ad Valorem	SPI	R	Tax Value	Notes
1F RES	0.500 ac	72,500	E	100	100	100	100		100	72,500	0	N	72,500	
	0.500 ac									72,500			**72,500**	

Map: 000R34 **Lot: 000056** **Sub: 000000** **Card: 1 of 1** **6 EXETER RD** **KINGSTON** **Printed: 07/22/2016**

PICTURE

OWNER

GETCHELL, ALICE G.

P.O.BOX 306

KINGSTON, NH 03848-0306

TAXABLE DISTRICTS

District	Percentage

PERMITS

Date	Permit ID	Permit Type	Notes

BUILDING DETAILS

Model: **1.75 STORY FRAME CAPE**
Roof: **GABLE HIP/ASPHALT**
Ext: **WOOD SHINGLE**
Int: **DRYWALL**
Floor: **CARPET**
Heat: **OIL/FA DUCTED**
Bedrooms: **4** Baths: **1.0** Fixtures:
Extra Kitchens: Fireplaces:
A/C: **No** Generators:
Quality: **A0 AVG**
Com. Wall:
Size Adj: **0.9676** Base Rate: **RSA 80.00**
Bldg. Rate: **0.9004**
Sq. Foot Cost: **$ 72.04**

BUILDING SUB AREA DETAILS

ID	Description	Area	Adj.	Effect.
TQF	3/4 STRY FIN	864	0.75	648
FFF	FST FLR FIN	1176	1.00	1176
BMU	BSMNT	864	0.15	130
DEK	DECK/ENTRANCE	15	0.10	2
GAR	GARAGE	576	0.45	259
GLA:	**1,824**	**3,495**		**2,215**

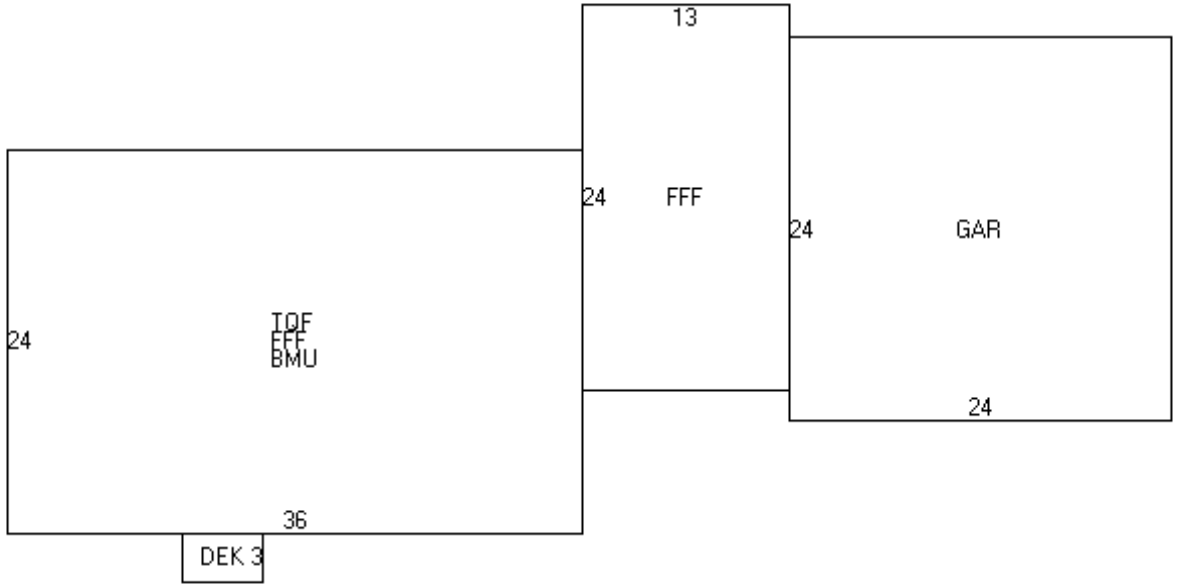

(TQF,FFF,BMU=D24R36)L20(DEK=D3L5)U3R25U9(FFF=U24R13)D2(GAR=D24R24)

2013 BASE YEAR BUILDING VALUATION

Market Cost New: **$ 159,569**
Year Built: **1950**
Condition For Age: AVERAGE **20 %**
Physical:
Functional:
Economic:
Temporary:
Total Depreciation: **20 %**

Building Value: **$ 127,700**

OWNER INFORMATION

BRIGGS, CAROL A., TRUSTEE
CAROL A. BRIGGS REV. TRUST
8 EXETER ROAD

KINGSTON, NH 03848-0237

SALES HISTORY

Date	Book	Page	Type	Price	Grantor
02/17/2005	4438	1566	U I 38		BRIGGS FAMILY TR.

PICTURE

LISTING HISTORY

06/12/12 KCML
05/14/03 BW O
05/08/03 SH X

NOTES

BROWN, CORRECT LABELING, SKETCH & EXTRA FEATURES 6/12KC

EXTRA FEATURES VALUATION

Feature Type	Units	Lngth x Width	Size Adj	Rate	Cond	Market Value	Notes
FIREPLACE 1-1	1		100	3,000.00	100	3,000	
GARAGE	756	21 x 36	81	30.00	70	12,860	STORAGE BLDNG
						15,900	

MUNICIPAL SOFTWARE BY AVITAR.

KINGSTON ASSESSING OFFICE

PARCEL TOTAL TAXABLE VALUE

Year	Building	Features	Land
2014	$ 148,600	$ 15,900	$ 78,500
		Parcel Total:	$ 243,000
2015	$ 148,600	$ 15,900	$ 78,500
		Parcel Total:	$ 243,000
2016	**$ 148,600**	**$ 15,900**	**$ 78,500**
		Parcel Total:	**$ 243,000**

LAND VALUATION

Zone: SFAGA SFR AGR AQUIFE **Minimum Acreage:** 3.00 **Minimum Frontage:** 200 **Site:** **Driveway:** **Road:**

Land Type	Units	Base Rate	NC	Adj	Site	Road	DWay	Topography	Cond	Ad Valorem	SPI	R	Tax Value	Notes
1F RES	1.400 ac	78,510	E	100	100	100	100		100	78,500	0	N	78,500	
	1.400 ac									78,500			**78,500**	

Map: 000R34 **Lot: 000057** **Sub: 000000** **Card: 1 of 1** **8 EXETER RD** **KINGSTON** **Printed: 07/22/2016**

PICTURE

OWNER

BRIGGS, CAROL A., TRUSTEE
CAROL A. BRIGGS REV. TRUST
8 EXETER ROAD

KINGSTON, NH 03848-0237

TAXABLE DISTRICTS

District	Percentage

PERMITS

Date	Permit ID	Permit Type	Notes

BUILDING DETAILS

Model: **1.00 STORY FRAME RANCH**
Roof: **GABLE HIP/ASPHALT**
Ext: **CEDAR/REDWD**
Int: **DRYWALL**
Floor: **HARDWOOD**
Heat: **OIL/FA DUCTED**
Bedrooms: **2** Baths: **1.0** Fixtures:
Extra Kitchens: Fireplaces:
A/C: **Yes 100.00 %** Generators:
Quality: **A0 AVG**
Com. Wall:
Size Adj: **0.9465** Base Rate: **RSA 80.00**
Bldg. Rate: **0.9465**
Sq. Foot Cost: **$ 75.72**

BUILDING SUB AREA DETAILS

ID	Description	Area	Adj.	Effect.
GAR	GARAGE	1040	0.45	468
FFF	FST FLR FIN	1540	1.00	1540
BMU	BSMNT	1540	0.15	231
OPU	OPEN PORCH	8	0.15	1
EPU	ENCL PORCH	576	0.35	202
BME	BSMT ENTRY	30	0.35	11
GLA:	**1,540**	**4,734**		**2,453**

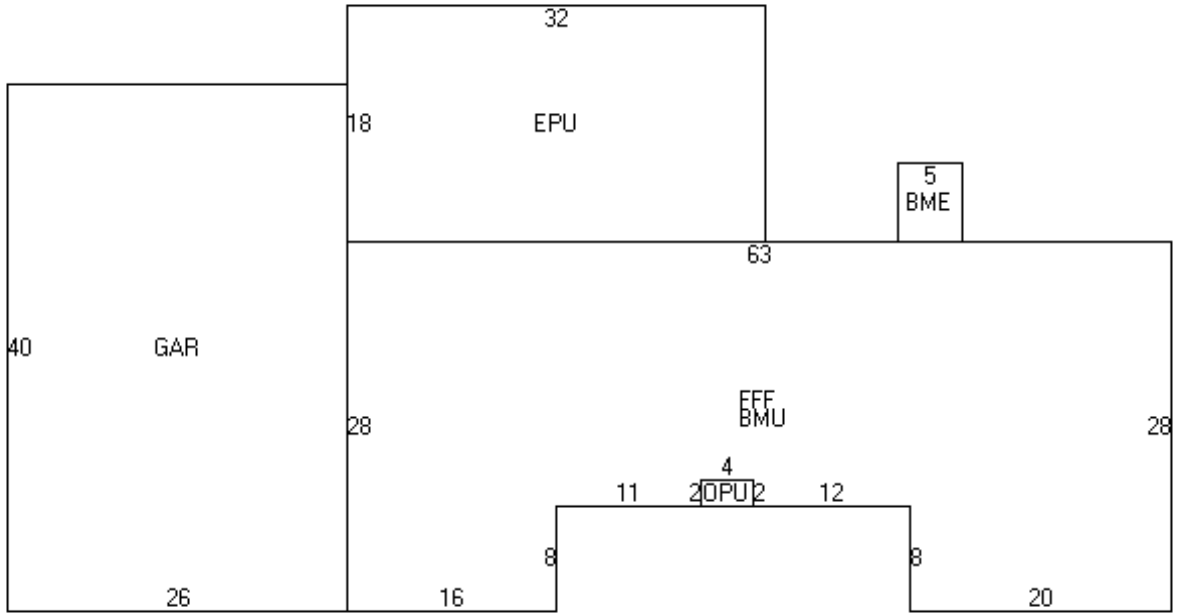

(GAR=D40R26)(FFF,BMU=U28R63D28L20U8L12U2L4D2L11D8L16)R27U10(OPU=R4D2)L31U20(EPU=U18R32)R10D18(BME=U6R5)

2013 BASE YEAR BUILDING VALUATION

Market Cost New: **$ 185,741**
Year Built: **1952**
Condition For Age: AVERAGE **20 %**
Physical:
Functional:
Economic:
Temporary:
Total Depreciation: **20 %**

Building Value: **$ 148,600**

OWNER INFORMATION

SCHEFFLER, MAX
SCHEFFLER, ELLEN
P. O. BOX 487

KINGSTON, NH 03848-0487

SALES HISTORY

Date	Book	Page	Type	Price	Grantor
04/01/2010	5099	2624	U I 51	100,000	BANK OF NEW YORK
07/16/2009	5033	748	U I 51	163,733	CARNEY, JOSEPH R
09/30/1999	3427	60	U I 38	100,000	CARNEY

PICTURE

LISTING HISTORY

04/11/16	KCPU	
03/15/13	KCPU	
06/12/12	KCM	
03/21/12	KCPU	
03/22/11	KCPU	CK 2012 FOR DEMO COMP A
04/15/10	KCX	ADJ COND ON HS & OUTBLI
04/20/07	JAR	P/U SIDING 2 100%
03/30/06	JARX	N/C; CK '07

NOTES

WHITE. NC TO STRUCTURE 3/12KC, CHK 2014 FOR GREEN HSE CHNG LABELING 3/15KC, DEMO ALL STRUCTURES ON LOT 4/16KC

EXTRA FEATURES VALUATION

Feature Type	Units	Lngth x Width	Size Adj	Rate	Cond	Market Value	Notes

MUNICIPAL SOFTWARE BY AVITAR

KINGSTON ASSESSING OFFICE

PARCEL TOTAL TAXABLE VALUE

Year	Building	Features	Land
2014	$ 22,900	$ 3,100	$ 88,500
		Parcel Total:	$ 114,500
2015	$ 22,900	$ 3,100	$ 88,500
		Parcel Total:	$ 114,500
2016	**$ 0**	**$ 0**	**$ 88,500**
		Parcel Total:	**$ 88,500**

LAND VALUATION

Zone: SFAGA SFR AGR AQUIFE **Minimum Acreage:** 3.00 **Minimum Frontage:** 200 **Site:** **Driveway:** **Road:**

Land Type	Units	Base Rate	NC	Adj	Site	Road	DWay	Topography	Cond	Ad Valorem	SPI	R	Tax Value	Notes
1F RES	2.940 ac	88,534	E	100	100	100	100		100	88,500	0	N	88,500	
	2.940 ac									88,500			**88,500**	

PICTURE

OWNER

SCHEFFLER, MAX
SCHEFFLER, ELLEN
P. O. BOX 487

KINGSTON, NH 03848-0487

TAXABLE DISTRICTS

District	Percentage

BUILDING DETAILS

Model:
Roof:
Ext:
Int:
Floor:
Heat:
Bedrooms: Baths: Fixtures:
Extra Kitchens: Fireplaces:
A/C: Generators:
Quality:
Com. Wall:
Stories:
Base Type:

PERMITS

Date	Permit ID	Permit Type	Notes
08/26/15	R34-58	DEMOLITION	DEMO PORTION OF HOUSE
08/10/12	R34-58	EXTERIOR ONLY	GREENHOUSE
02/23/11	CA20111036	SEPTIC	APPROVAL FOR CONSTRU
01/06/11	R34-58	ELECTRIC PERMIT	TEMP SERVICE
10/12/10	R34-58	DEMOLITION	DEMO HOUSE AND FILL IN
06/01/04	R34-58	EXTERIOR ONLY	VINYL SIDING OVER EXIST

BUILDING SUB AREA DETAILS

2013 BASE YEAR BUILDING VALUATION

Year Built:
Condition For Age: %
Physical:
Functional:
Economic:
Temporary:
%

OWNER INFORMATION

NOWOSACKI, JENNA R.
TURCOTTE, BRIAN S.
14 EXETER ROAD

KINGSTON, NH 03848

SALES HISTORY

Date	Book	Page	Type	Price	Grantor
06/26/2013	5454	0419	Q I	280,000	RUBIN, PETER E
12/22/1992	2961	0085	U I 38		SAGER, THOMAS K

PICTURE

LISTING HISTORY

08/14/13	FS M	
06/12/12	KCML	
04/20/07	JARX	P/U NEW SHD; 100%
05/12/03	SH O	
05/08/03	SH X	

NOTES

RED. CORRECT SKETCH AND EXTRA FEATURES 6/12KC

EXTRA FEATURES VALUATION

Feature Type	Units	Lngth x Width	Size Adj	Rate	Cond	Market Value	Notes
FIREPLACE 2-1	2		100	4,000.00	100	8,000	
GARAGE/LOFT	672	28 x 24	84	35.00	80	15,805	
						23,800	

MUNICIPAL SOFTWARE BY AVITAR

KINGSTON ASSESSING OFFICE

PARCEL TOTAL TAXABLE VALUE

Year	Building	Features	Land
2014	$ 168,200	$ 23,800	$ 93,500
		Parcel Total:	$ 285,500
2015	$ 168,200	$ 23,800	$ 93,500
		Parcel Total:	$ 285,500
2016	**$ 168,200**	**$ 23,800**	**$ 93,500**
		Parcel Total:	**$ 285,500**

LAND VALUATION

Zone: SFAGA SFR AGR AQUIFE **Minimum Acreage:** 3.00 **Minimum Frontage:** 200 **Site:** **Driveway:** **Road:**

Land Type	Units	Base Rate	NC	Adj	Site	Road	DWay	Topography	Cond	Ad Valorem	SPI	R	Tax Value	Notes
1F RES	3.000 ac	89,000	E	100	100	100	100		100	89,000	0	N	89,000	
1F RES	2.300 ac	x 2,000	X	97					100	4,500	0	N	4,500	
	5.300 ac									93,500			**93,500**	

Map: 000R34 **Lot: 000059** **Sub: 000000** **Card: 1 of 1** **14 EXETER RD** **KINGSTON** **Printed: 07/22/2016**

PICTURE

OWNER

NOWOSACKI, JENNA R.
TURCOTTE, BRIAN S.
14 EXETER ROAD

KINGSTON, NH 03848

TAXABLE DISTRICTS

District	Percentage

PERMITS

Date	Permit ID	Permit Type	Notes
07/19/06	R34-59	NEW BUILDING	SHED 8 X 12.5
01/10/06	R34-59	SEPTIC	IN KIND REPLACEMENT; 4
08/09/02	R34-59	WELL	COMAC / 705'; 6.5 GPM
08/23/82	R34-59	ADDITION	18' X 24' ADDITION
04/13/77	R34-59	GARAGE	28' X 24' GARAGE

BUILDING DETAILS

Model: **2.00 STORY FRAME GAMBREL**
Roof: **GAMBREL/ASPHALT**
Ext: **ALUM SIDING**
Int: **DRYWALL**
Floor: **HARDWOOD/CARPET**
Heat: **OIL/HOT WATER**
Bedrooms: **4** Baths: **3.0** Fixtures:
Extra Kitchens: Fireplaces:
A/C: **No** Generators:
Quality: **A0 AVG**
Com. Wall:
Size Adj: **0.9210** Base Rate: **RSA 80.00**
Bldg. Rate: **0.9206**
Sq. Foot Cost: **$ 73.65**

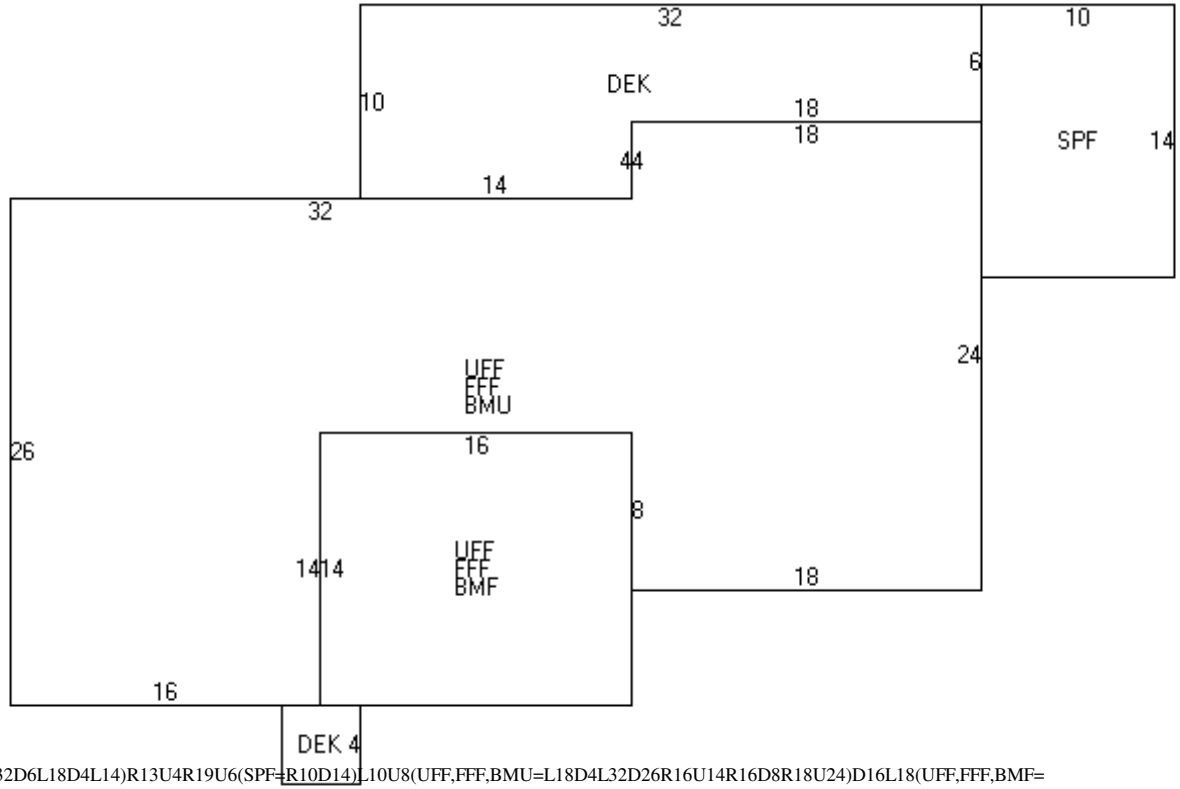

(DEK=U10R32D6L18D4L14)R13U4R19U6(SPF=R10D14)L10U8(UFF,FFF,BMU=L18D4L32D26R16U14R16D8R18U24)D16L18(UFF,FFF,BMF=L16D14)R2(DEK=D4L4)

BUILDING SUB AREA DETAILS

ID	Description	Area	Adj.	Effect.
DEK	DECK/ENTRANCE	264	0.10	26
SPF	SCREEN PORCH	140	0.30	42
UFF	UPPER FLR FIN	1264	1.00	1264
FFF	FST FLR FIN	1264	1.00	1264
BMU	BSMNT	1040	0.15	156
BMF	BSMNT FINISHED	224	0.30	67
GLA:	**2,528**	**4,196**		**2,819**

2013 BASE YEAR BUILDING VALUATION

Market Cost New:		**$ 207,619**
Year Built:		**1973**
Condition For Age:	AVERAGE	**16 %**
Physical:		
Functional:	WALL HGT	**3 %**
Economic:		
Temporary:		
Total Depreciation:		**19 %**
Building Value:		**$ 168,200**

OWNER INFORMATION

SABLE, GREGORY R
SABLE, TERRY L
20 EXETER RD

KINGSTON, NH 03848-3108

SALES HISTORY

Date	Book	Page	Type	Price	Grantor

PICTURE

LISTING HISTORY

06/12/12	KCML
03/22/11	KCPU
04/15/10	KCO
02/26/09	FRR
05/08/03	SH X

NOTES

GREY,CHK 09 FIRE DAMAGE RW. CANT LIVE IN HOUSE HSE @ 20% CK 10 FOR FIN FRR 3/09, CHK 2011 FOR FARMERS PORCH, RENOV'S 100% COMP 4/10KC, CORRECT EXTRAFEATURES-BTH COUNT & SKETCH 6/12KC

EXTRA FEATURES VALUATION

Feature Type	Units	Lngth x Width	Size Adj	Rate	Cond	Market Value	Notes
GARAGE	240	12 x 20	127	30.00	60	5,486	
SHED-WOOD	240	12 x 20	127	10.00	70	2,134	
SHOP-1	1,120	28 x 40	74	34.00	60	16,908	
FIREPLACE 1-1	1		100	3,000.00	100	3,000	
						27,500	

MUNICIPAL SOFTWARE BY AVITAR

KINGSTON ASSESSING OFFICE

PARCEL TOTAL TAXABLE VALUE

Year	Building	Features	Land
2014	$ 137,900	$ 27,500	$ 120,100
		Parcel Total:	$ 285,500
2015	$ 137,900	$ 27,500	$ 120,100
		Parcel Total:	$ 285,500
2016	**$ 137,900**	**$ 27,500**	**$ 120,100**
		Parcel Total:	**$ 285,500**

LAND VALUATION

Zone: SFAGA SFR AGR AQUIFE **Minimum Acreage:** 3.00 **Minimum Frontage:** 200 **Site:** **Driveway:** **Road:**

Land Type	Units	Base Rate	NC	Adj	Site	Road	DWay	Topography	Cond	Ad Valorem	SPI	R	Tax Value	Notes
1F RES	3.000 ac	89,000	E	100	100	100	100		100	89,000	0	N	89,000	
1F RES	5.800 ac	x 2,000	X	96					100	11,100	0	N	11,100	
1F RES	200.000 ff	x 100	E	100					100	20,000	0	N	20,000	
	8.800 ac									120,100			**120,100**	

Map: 000R34 **Lot: 000060** **Sub: 000000** **Card: 1 of 1** **20 EXETER RD** **KINGSTON** **Printed: 07/22/2016**

PICTURE

OWNER

SABLE, GREGORY R
SABLE, TERRY L
20 EXETER RD

KINGSTON, NH 03848-3108

TAXABLE DISTRICTS

District	Percentage

PERMITS

Date	Permit ID	Permit Type	Notes
02/17/09	R34-60	ALTERATION	POST FIRE RENOVATIONS,

BUILDING DETAILS

Model: **2.00 STORY FRAME GAMBREL**
Roof: **GAMBREL/ASPHALT**
Ext: **CLAP BOARD**
Int: **DRYWALL**
Floor: **HARDWOOD/PINE/SOFT WD**
Heat: **OIL/HOT WATER**
Bedrooms: **3** Baths: **1.5** Fixtures:
Extra Kitchens: Fireplaces:
A/C: **No** Generators:
Quality: **A0 AVG**
Com. Wall:
Size Adj: **0.9519** Base Rate: **RSA 80.00**
Bldg. Rate: **0.9142**
Sq. Foot Cost: **$ 73.14**

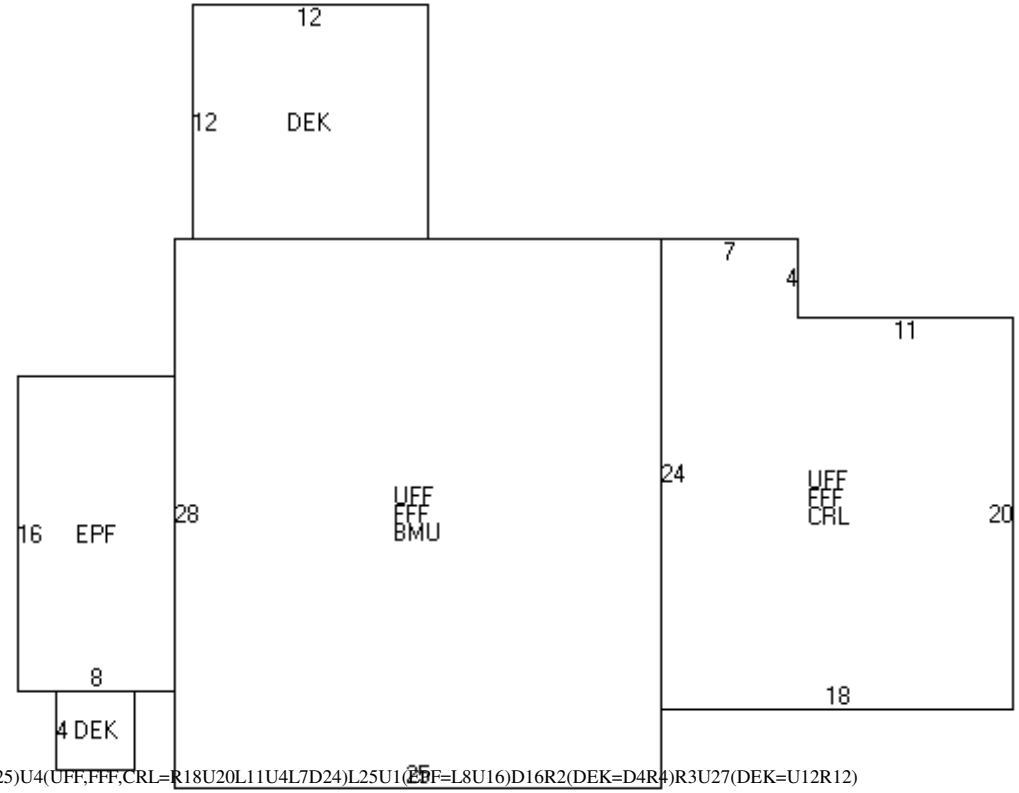

(UFF,FFF,BMU=D28R25)U4(UFF,FFF,CRL=R18U20L11U4L7D24)L25U1(EPF=L8U16)D16R2(DEK=D4R4)R3U27(DEK=U12R12)

BUILDING SUB AREA DETAILS

ID	Description	Area	Adj.	Effect.
UFF	UPPER FLR FIN	1088	1.00	1088
FFF	FST FLR FIN	1088	1.00	1088
BMU	BSMNT	700	0.15	105
CRL	CRAWL	388	0.00	0
EPF	ENCLSD PORCH	128	0.70	90
DEK	DECK/ENTRANCE	160	0.10	16
GLA:	**2,266**	**3,552**		**2,387**

2013 BASE YEAR BUILDING VALUATION

Market Cost New:		**$ 174,585**
Year Built:		**1970**
Condition For Age:	AVERAGE	**16 %**
Physical:		
Functional:	WALL HGT	**5 %**
Economic:		
Temporary:		
Total Depreciation:		**21 %**
Building Value:		**$ 137,900**

OWNER INFORMATION

MITCHELL, ELAINE
MITCHELL, DOUGLAS & MARC G
15 EXETER RD

KINGSTON, NH 03848-3109

SALES HISTORY

Date	Book	Page	Type	Price	Grantor

PICTURE

LISTING HISTORY

06/12/12 KCM
05/08/03 SH O

NOTES

BLUE, LEAKY ROOF, WATER IN BASEMENT.

EXTRA FEATURES VALUATION

Feature Type	Units	Lngth x Width	Size Adj	Rate	Cond	Market Value	Notes
FIREPLACE 1-1	1		100	3,000.00	100	3,000	
BARN	1,428	34 x 42	71	16.20	80	13,140	
BARN	7,776	54 x 144	62	16.20	80	62,482	
LEAN-TO	432	12 x 36	97	3.00	60	754	
						79,400	

MUNICIPAL SOFTWARE BY AVITAR.

KINGSTON ASSESSING OFFICE

PARCEL TOTAL TAXABLE VALUE

Year	Building	Features	Land
2014	$ 124,300	$ 79,400	$ 101,232
		Parcel Total:	$ 304,932
2015	$ 124,300	$ 79,400	$ 100,226
		Parcel Total:	$ 303,926
2016	**$ 124,300**	**$ 79,400**	**$ 100,226**
		Parcel Total:	**$ 303,926**

LAND VALUATION

Zone: SFAGA SFR AGR AQUIFE **Minimum Acreage:** 3.00 **Minimum Frontage:** 200 **Site:** **Driveway:** **Road:**

Land Type	Units	Base Rate	NC	Adj	Site	Road	DWay	Topography	Cond	Ad Valorem	SPI	R	Tax Value	Notes
1F RES	3.000 ac	89,000	E	100	100	100	100		100	89,000	0	N	89,000	
UNMNGD PINE	18.000 ac	x 2,000	X	81					75	21,900	80	N	2,489	TOPO
UNMNGD PINE	1,000.000 ff	x 100	E	100					100	100,000	0	N	0	
FARM LAND	27.000 ac	x 2,000	X	81					100	43,700	80	N	8,737	
	48.000 ac									254,600			**100,226**	

Map: 000R34 **Lot: 000061** **Sub: 000000** **Card: 1 of 1** **15 EXETER RD** **KINGSTON** **Printed: 07/22/2016**

PICTURE

OWNER

MITCHELL, ELAINE
MITCHELL, DOUGLAS & MARC G
15 EXETER RD

KINGSTON, NH 03848-3109

TAXABLE DISTRICTS

District	Percentage

PERMITS

Date	Permit ID	Permit Type	Notes

BUILDING DETAILS

Model: **2.00 STORY FRAME OLD STYLE**
Roof: **GABLE HIP/ASPHALT**
Ext: **WOOD SHINGLE**
Int: **DRYWALL**
Floor: **HARDWOOD/CARPET**
Heat: **OIL/HOT WATER**
Bedrooms: **5** Baths: **2.0** Fixtures:
Extra Kitchens: Fireplaces:
A/C: **No** Generators:
Quality: **A0 AVG**
Com. Wall:
Size Adj: **0.9763** Base Rate: **RSA 80.00**
Bldg. Rate: **0.9472**
Sq. Foot Cost: **$ 75.78**

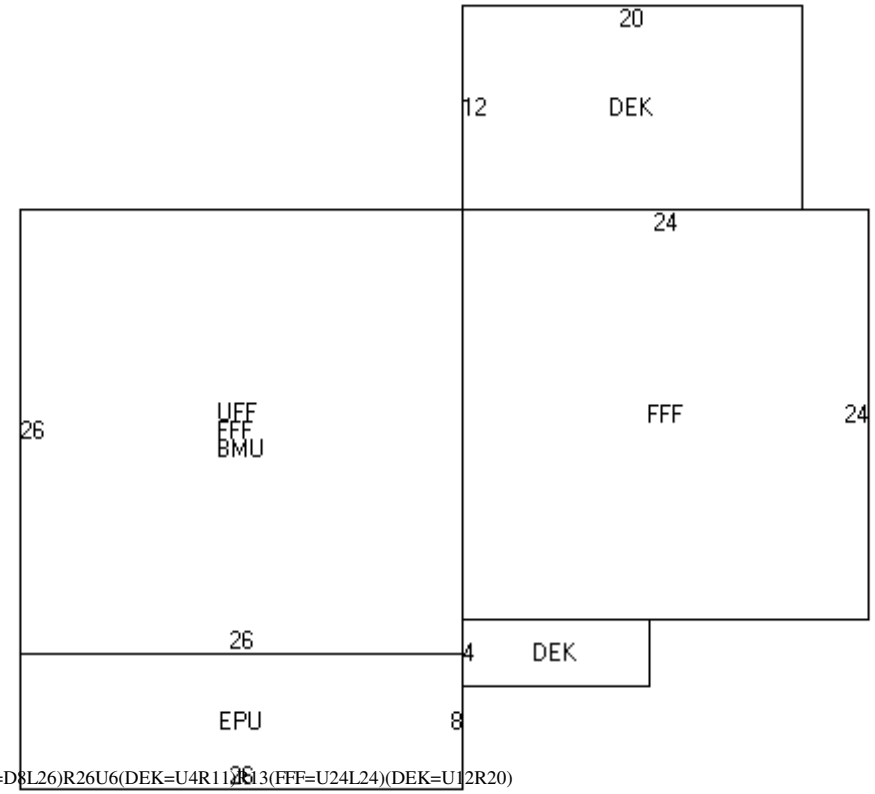

(UFF,FFF,BMU=D26R26)(EPU=D8L26)R26U6(DEK=U4R11U6L3(FFF=U24L24)(DEK=U12R20)

BUILDING SUB AREA DETAILS

ID	Description	Area	Adj.	Effect.
UFF	UPPER FLR FIN	676	1.00	676
FFF	FST FLR FIN	1252	1.00	1252
BMU	BSMNT	676	0.15	101
EPU	ENCL PORCH	208	0.35	73
DEK	DECK/ENTRANCE	284	0.10	28
GLA:	**1,928**	**3,096**		**2,130**

2013 BASE YEAR BUILDING VALUATION

Market Cost New:		**$ 161,411**
Year Built:		**1930**
Condition For Age:	AVERAGE	**23 %**
Physical:		
Functional:		
Economic:		
Temporary:		
Total Depreciation:		**23 %**
Building Value:		**$ 124,300**

OWNER INFORMATION

CUMMINGS, KENNETH S

P O BOX 472

KINGSTON, NH 03848-0472

SALES HISTORY

Date	Book	Page	Type	Price	Grantor
02/01/2005	4432	1011	U I 23		CUMMINGS, DOROTHY

PICTURE

LISTING HISTORY

06/12/12 KCML
04/20/04 SH X
05/08/03 SH O

NOTES

BLUE, WATER IN BASEMENT, SUMP PUMP, 2/05 RAMP IN-NVC-BW, CORRECT DEK 6/12KC

EXTRA FEATURES VALUATION

Feature Type	Units	Lngth x Width	Size Adj	Rate	Cond	Market Value	Notes
GARAGE	308	14 x 22	112	30.00	70	7,244	
						7,200	

MUNICIPAL SOFTWARE BY AVITAR.

KINGSTON ASSESSING OFFICE

PARCEL TOTAL TAXABLE VALUE

Year	Building	Features	Land
2014	$ 86,100	$ 7,200	$ 72,500
		Parcel Total:	$ 165,800
2015	$ 86,100	$ 7,200	$ 72,500
		Parcel Total:	$ 165,800
2016	**$ 86,100**	**$ 7,200**	**$ 72,500**
		Parcel Total:	**$ 165,800**

LAND VALUATION

Zone: SFAGA SFR AGR AQUIFE **Minimum Acreage:** 3.00 **Minimum Frontage:** 200 **Site:** **Driveway:** **Road:**

Land Type	Units	Base Rate	NC	Adj	Site	Road	DWay	Topography	Cond	Ad Valorem	SPI	R	Tax Value	Notes
1F RES	0.500 ac	72,500	E	100	100	100	100		100	72,500	0	N	72,500	
	0.500 ac									72,500			**72,500**	

Map: 000R34 **Lot: 000062** **Sub: 000000** **Card: 1 of 1** **9 EXETER RD** **KINGSTON** **Printed: 07/22/2016**

PICTURE

OWNER

CUMMINGS, KENNETH S

P O BOX 472

KINGSTON, NH 03848-0472

TAXABLE DISTRICTS

District	Percentage

PERMITS

Date	Permit ID	Permit Type	Notes
03/26/04	R34-62	BLDG.	TEMPORARY ACCESS RAM

BUILDING DETAILS

Model: **1.00 STORY FRAME RANCH**
Roof: **GABLE HIP/ASPHALT**
Ext: **WOOD SHINGLE**
Int: **DRYWALL**
Floor: **HARDWOOD**
Heat: **OIL/FA DUCTED**
Bedrooms: **3** Baths: **1.0** Fixtures:
Extra Kitchens: Fireplaces:
A/C: **No** Generators:
Quality: **A0 AVG**
Com. Wall:
Size Adj: **1.1457** Base Rate: **RSA 80.00**
Bldg. Rate: **1.0770**
Sq. Foot Cost: **$ 86.16**

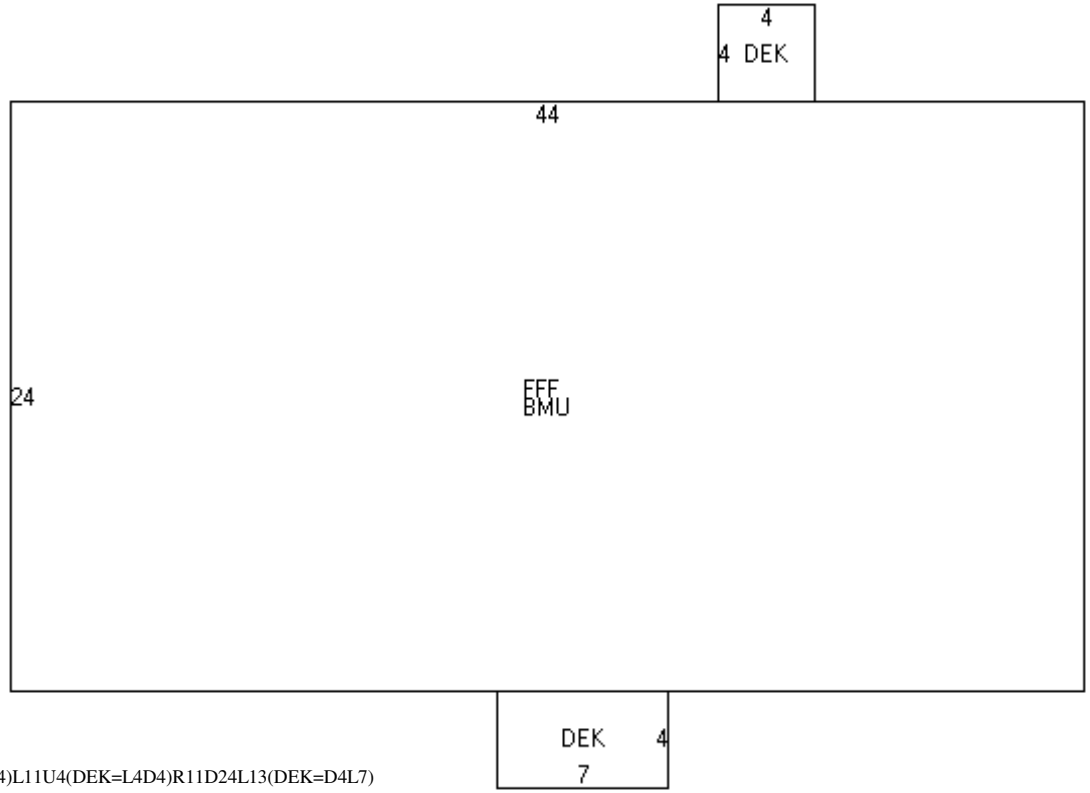

(FFF,BMU=U24R44)L11U4(DEK=L4D4)R11D24L13(DEK=D4L7)

BUILDING SUB AREA DETAILS

ID	Description	Area	Adj.	Effect.
FFF	FST FLR FIN	1056	1.00	1056
BMU	BSMNT	1056	0.15	158
DEK	DECK/ENTRANCE	44	0.10	4
GLA:	**1,056**	**2,156**		**1,218**

2013 BASE YEAR BUILDING VALUATION

Market Cost New:		**$ 104,943**
Year Built:		**1960**
Condition For Age:	AVERAGE	**18 %**
Physical:		
Functional:		
Economic:		
Temporary:		
Total Depreciation:		**18 %**
Building Value:		**$ 86,100**

OWNER INFORMATION

BRIGGS, CAROL A., TRUSTEE
CAROL A. BRIGGS REV. TRUST
8 EXETER ROAD

KINGSTON, NH 03848-0237

SALES HISTORY

Date	Book	Page	Type	Price	Grantor
02/17/2005	4438	1566	U V 38		BRIGGS FAMILY TR.

PICTURE

LISTING HISTORY

06/01/12 KCV
05/08/03 SH

NOTES

VACANT 80 X .10 UNBUILD WET = 8 (CHANGES MADE @ HEARINGS---SH)
09/09 ADJSUT FOR WET AREA IN BACK RW

EXTRA FEATURES VALUATION

Feature Type	Units	Lngth x Width	Size Adj	Rate	Cond	Market Value	Notes

MUNICIPAL SOFTWARE BY AVITAR

KINGSTON ASSESSING OFFICE

PARCEL TOTAL TAXABLE VALUE

Year	Building	Features	Land
2014	$ 0	$ 0	$ 5,800
		Parcel Total:	$ 5,800
2015	$ 0	$ 0	$ 5,800
		Parcel Total:	$ 5,800
2016	**$ 0**	**$ 0**	**$ 5,800**
		Parcel Total:	**$ 5,800**

LAND VALUATION

Zone: SFAGA SFR AGR AQUIFE **Minimum Acreage:** 3.00 **Minimum Frontage:** 200 **Site:** **Driveway:** **Road:**

Land Type	Units	Base Rate	NC	Adj	Site	Road	DWay	Topography	Cond	Ad Valorem	SPI	R	Tax Value	Notes
1F RES	0.500 ac	72,500	E	100	100	100	100		8	5,800	0	N	5,800	VACANT
	0.500 ac									5,800			**5,800**	

PICTURE

OWNER

BRIGGS, CAROL A., TRUSTEE
CAROL A. BRIGGS REV. TRUST
8 EXETER ROAD

KINGSTON, NH 03848-0237

TAXABLE DISTRICTS

District	Percentage

PERMITS

Date	Permit ID	Permit Type	Notes

BUILDING DETAILS

Model:
Roof:
Ext:
Int:
Floor:
Heat:
Bedrooms: Baths: Fixtures:
Extra Kitchens: Fireplaces:
A/C: Generators:
Quality:
Com. Wall:
Stories:
Base Type:

BUILDING SUB AREA DETAILS

2013 BASE YEAR BUILDING VALUATION

Year Built:
Condition For Age: %
Physical:
Functional:
Economic:
Temporary:
%

OWNER INFORMATION

SLOCOMBE, SUSAN M

3 EXETER RD

KINGSTON, NH 03848

SALES HISTORY

Date	Book	Page	Type	Price	Grantor

PICTURE

LISTING HISTORY

06/12/12	KCML
05/13/03	KJ O
05/08/03	SH X

NOTES

BLUE, ADD DET DEK-A/C, CORRECT HEAT & BTH COUNT 6/12KC

EXTRA FEATURES VALUATION

Feature Type	Units	Lngth x Width	Size Adj	Rate	Cond	Market Value	Notes
SHED-WOOD	96	8 x 12	227	10.00	80	1,743	
DECK DETACHED	192	12 x 16	143	10.00	20	549	
						2,300	

MUNICIPAL SOFTWARE BY AVITAR.

KINGSTON ASSESSING OFFICE

PARCEL TOTAL TAXABLE VALUE

Year	Building	Features	Land
2014	$ 85,500	$ 2,300	$ 72,500
		Parcel Total:	$ 160,300
2015	$ 85,500	$ 2,300	$ 72,500
		Parcel Total:	$ 160,300
2016	**$ 85,500**	**$ 2,300**	**$ 72,500**
		Parcel Total:	**$ 160,300**

LAND VALUATION

Zone: SFAGA SFR AGR AQUIFE **Minimum Acreage:** 3.00 **Minimum Frontage:** 200 **Site:** **Driveway:** **Road:**

Land Type	Units	Base Rate	NC	Adj	Site	Road	DWay	Topography	Cond	Ad Valorem	SPI	R	Tax Value	Notes
1F RES	0.500 ac	72,500	E	100	100	100	100		100	72,500	0	N	72,500	
	0.500 ac									72,500			**72,500**	

Map: 000R34 **Lot: 000064** **Sub: 000000** **Card: 1 of 1** **3 EXETER RD** **KINGSTON** **Printed: 07/22/2016**

PICTURE

OWNER

SLOCOMBE, SUSAN M

3 EXETER RD

KINGSTON, NH 03848

TAXABLE DISTRICTS

District	Percentage

PERMITS

Date	Permit ID	Permit Type	Notes

BUILDING DETAILS

Model: **1.00 STORY FRAME RANCH**
Roof: **GABLE HIP/ASPHALT**
Ext: **WOOD SHINGLE**
Int: **DRYWALL**
Floor: **HARDWOOD/CARPET**
Heat: **OIL/FA DUCTED**
Bedrooms: **3** Baths: **1.0** Fixtures:
Extra Kitchens: Fireplaces:
A/C: **Yes 100.00 %** Generators:
Quality: **A0 AVG**
Com. Wall:
Size Adj: **1.1371** Base Rate: **RSA 80.00**
Bldg. Rate: **1.1144**
Sq. Foot Cost: **$ 89.15**

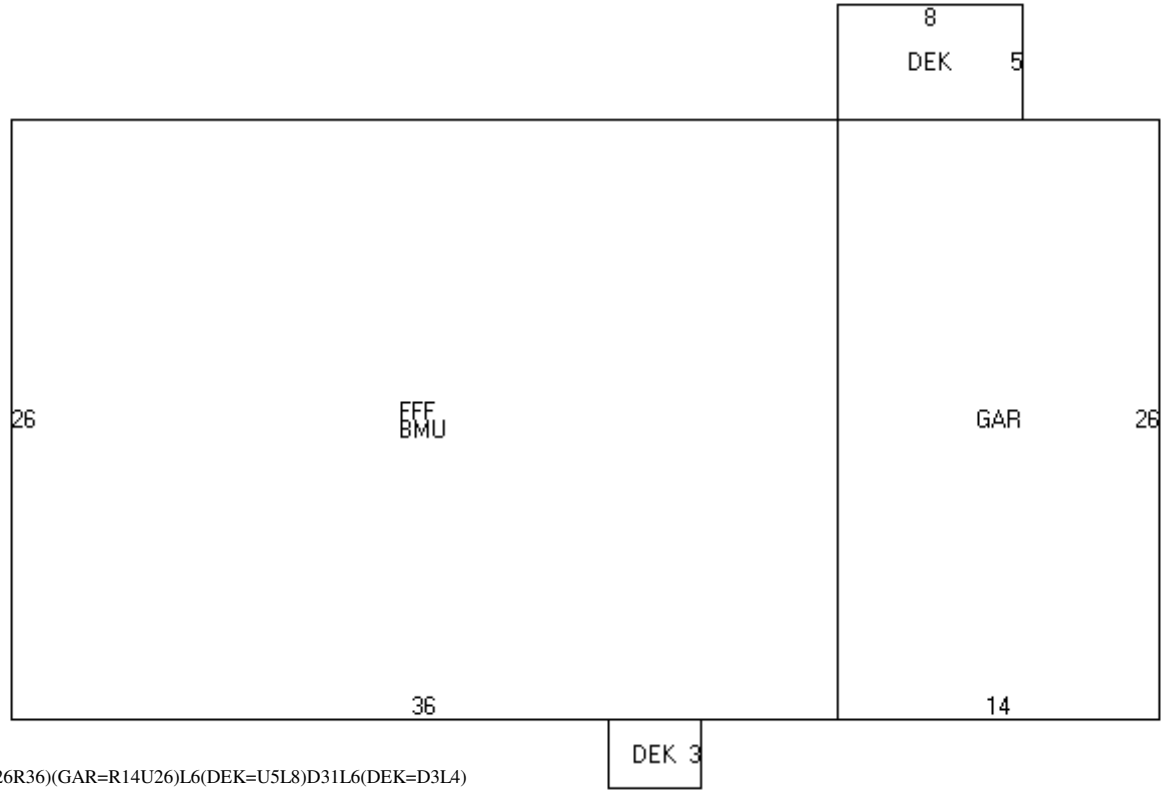

(FFF,BMU=D26R36)(GAR=R14U26)L6(DEK=U5L8)D31L6(DEK=D3L4)

BUILDING SUB AREA DETAILS

ID	Description	Area	Adj.	Effect.
FFF	FST FLR FIN	936	1.00	936
BMU	BSMNT	936	0.15	140
GAR	GARAGE	364	0.45	164
DEK	DECK/ENTRANCE	52	0.10	5
GLA:	**936**	**2,288**		**1,245**

2013 BASE YEAR BUILDING VALUATION

Market Cost New:		**$ 110,992**
Year Built:		**1960**
Condition For Age:	AVERAGE	**18 %**
Physical:		
Functional:	WET BSMT	**5 %**
Economic:		
Temporary:		
Total Depreciation:		**23 %**
Building Value:		**$ 85,500**

OWNER INFORMATION

ELDRIDGE, THOMAS R JR
ELDRIDGE, STEPHANIE R
1 EXETER RD

KINGSTON, NH 03848

SALES HISTORY

Date	Book	Page	Type	Price	Grantor

PICTURE

LISTING HISTORY

06/12/12 KCM
05/08/03 SH O

NOTES

BROWN, WATER IN BASEMENT DURING HEAVY RAIN, SUMP PUMP

EXTRA FEATURES VALUATION

Feature Type	Units	Lngth x Width	Size Adj	Rate	Cond	Market Value	Notes

MUNICIPAL SOFTWARE BY AVITAR.

KINGSTON ASSESSING OFFICE

PARCEL TOTAL TAXABLE VALUE

Year	Building	Features	Land
2014	$ 187,600	$ 0	$ 78,500
		Parcel Total:	$ 266,100
2015	$ 187,600	$ 0	$ 78,500
		Parcel Total:	$ 266,100
2016	**$ 187,600**	**$ 0**	**$ 78,500**
		Parcel Total:	**$ 266,100**

LAND VALUATION

Zone: SFAGA SFR AGR AQUIFE **Minimum Acreage:** 3.00 **Minimum Frontage:** 200 **Site:** **Driveway:** **Road:**

Land Type	Units	Base Rate	NC	Adj	Site	Road	DWay	Topography	Cond	Ad Valorem	SPI	R	Tax Value	Notes
1F RES	1.400 ac	78,510	E	100	100	100	100		100	78,500	0	N	78,500	
	1.400 ac									78,500			**78,500**	

Map: 000R34 **Lot: 000065** **Sub: 000000** **Card: 1 of 1** **1 EXETER RD** **KINGSTON** **Printed: 07/22/2016**

PICTURE

OWNER

ELDRIDGE, THOMAS R JR
ELDRIDGE, STEPHANIE R
1 EXETER RD

KINGSTON, NH 03848

TAXABLE DISTRICTS

District	Percentage

PERMITS

Date	Permit ID	Permit Type	Notes

BUILDING DETAILS

Model: **1.50 STORY FRAME CAPE**
Roof: **GABLE HIP/ASPHALT**
Ext: **ALUM SIDING**
Int: **DRYWALL**
Floor: **HARDWOOD**
Heat: **OIL/HOT WATER**
Bedrooms: **2** Baths: **2.0** Fixtures:
Extra Kitchens: Fireplaces:
A/C: **No** Generators:
Quality: **A1 AVG+10**
Com. Wall:
Size Adj: **0.9081** Base Rate: **RSA 80.00**
Bldg. Rate: **0.9496**
Sq. Foot Cost: **$ 75.97**

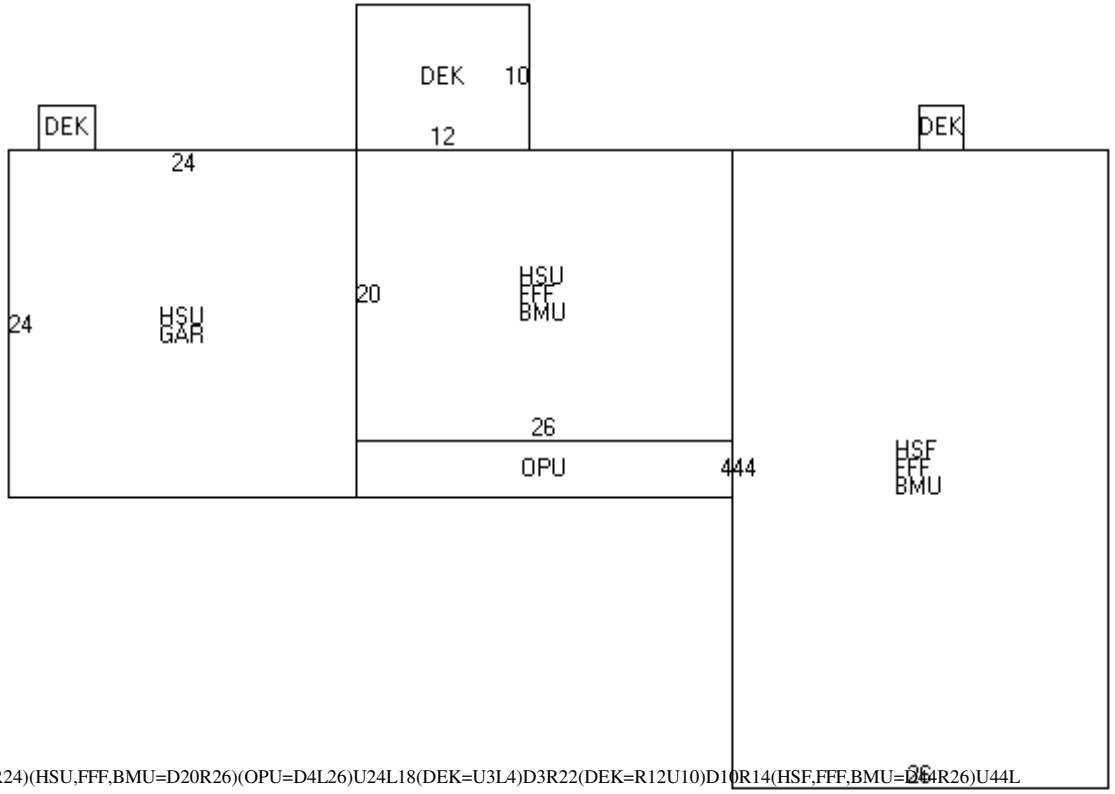

(HSU,GAR=U24R24)(HSU,FFF,BMU=D20R26)(OPU=D4L26)U24L18(DEK=U3L4)D3R22(DEK=R12U10)D10R14(HSF,FFF,BMU=D44R26)U44L10(DEK=U3L3)

BUILDING SUB AREA DETAILS

ID	Description	Area	Adj.	Effect.
HSU	1/2 STRY UNFIN	1096	0.25	274
GAR	GARAGE	576	0.45	259
FFF	FST FLR FIN	1664	1.00	1664
BMU	BSMNT	1664	0.15	250
OPU	OPEN PORCH	104	0.15	16
DEK	DECK/ENTRANCE	141	0.10	14
HSF	1/2 STRY FIN	1144	0.50	572
GLA:	**2,236**	**6,389**		**3,049**

2013 BASE YEAR BUILDING VALUATION

Market Cost New:		**$ 231,633**
Year Built:		**1955**
Condition For Age:	AVERAGE	**19 %**
Physical:		
Functional:		
Economic:		
Temporary:		
Total Depreciation:		**19 %**
Building Value:		**$ 187,600**

OWNER INFORMATION

TOWN OF KINGSTON

163 MAIN ST
PO BOX 716
KINGSTON, NH 03848-0716

SALES HISTORY

Date	Book	Page	Type	Price	Grantor
03/13/1984			U V 35		MAGNUSSON, WALDO M

PICTURE

LISTING HISTORY

06/01/12 KCV
05/08/03 SH

NOTES

D-2594. VACANT, VAC 80 X ACCESS 80 =64. MAGNUSSON FIELD.

EXTRA FEATURES VALUATION

Feature Type	Units	Lngth x Width	Size Adj	Rate	Cond	Market Value	Notes

MUNICIPAL SOFTWARE BY AVITAR

KINGSTON ASSESSING OFFICE

PARCEL TOTAL TAXABLE VALUE

Year	Building	Features	Land
2014	$ 0	$ 0	$ 90,400
		Parcel Total:	$ 90,400
2015	$ 0	$ 0	$ 90,400
		Parcel Total:	$ 90,400
2016	**$ 0**	**$ 0**	**$ 90,400**
		Parcel Total:	**$ 90,400**

LAND VALUATION

Zone: SFRAQ SFR W/AQUIFER **Minimum Acreage:** 3.00 **Minimum Frontage:** 200 **Site:** **Driveway:** **Road:**

Land Type	Units	Base Rate	NC	Adj	Site	Road	DWay	Topography	Cond	Ad Valorem	SPI	R	Tax Value	Notes
EXEMPT-MUNIC	3.000 ac	89,000	J	150	100	100	100		64	85,400	0	N	85,400	VACANT
EXEMPT-MUNIC	2.600 ac	x 2,000	X	97					100	5,000	0	N	5,000	
	5.600 ac									90,400			**90,400**	

PICTURE

OWNER

TOWN OF KINGSTON

163 MAIN ST
PO BOX 716
KINGSTON, NH 03848-0716

TAXABLE DISTRICTS

District	Percentage

BUILDING DETAILS

Model:
Roof:
Ext:
Int:
Floor:
Heat:
Bedrooms: Baths: Fixtures:
Extra Kitchens: Fireplaces:
A/C: Generators:
Quality:
Com. Wall:
Stories:
Base Type:

PERMITS

Date	Permit ID	Permit Type	Notes
08/15/97	R34-66	NEW BUILDING	FIELD HS/SHED
05/08/97	R34-66	NEW BUILDING	DUGOUTS

BUILDING SUB AREA DETAILS

2013 BASE YEAR BUILDING VALUATION

Year Built:
Condition For Age: %
Physical:
Functional:
Economic:
Temporary:
%

OWNER INFORMATION

DEMERS, GEORGE J & PAULA J
DEMERS FAMILY TRUST
27 NORWOOD ROAD

SALEM, NH 03079

SALES HISTORY

Date	Book	Page	Type	Price	Grantor
07/31/2014	5542	0392	U I 81	300,000	HAYES, ROBERT E

PICTURE

LISTING HISTORY

04/25/16	BOSA	
04/11/16	KCPU	
04/04/16	FSPU	
06/25/12	KCM	CORRECT SKETCH LABELIN
05/05/03	KJ O	

NOTES

D-22786. CHECK FOR HOUSE DEMO - CHANGES FOR 2016 4/4/16 HOUSE BARN DEMOLISHED REMOVED FROM LISTING, HSE DEMOD 4/16KC

EXTRA FEATURES VALUATION

Feature Type	Units	Lngth x Width	Size Adj	Rate	Cond	Market Value	Notes
GREENHOUSE NON/COMM	300	20 x 15	113	24.00	30	2,441	
SHED-WOOD	80	10 x 8	260	10.00	20	416	
						2,900	

MUNICIPAL SOFTWARE BY AVITAR

KINGSTON ASSESSING OFFICE

PARCEL TOTAL TAXABLE VALUE

Year	Building	Features	Land
2014	$ 203,200	$ 62,800	$ 86,285
		Parcel Total:	$ 352,285
2015	$ 203,200	$ 62,800	$ 85,793
		Parcel Total:	$ 351,793
2016	**$ 0**	**$ 2,900**	**$ 85,793**
		Parcel Total:	**$ 88,693**

LAND VALUATION

Zone: SFAGA SFR AGR AQUIFE **Minimum Acreage:** 3.00 **Minimum Frontage:** 200 **Site:** **Driveway:** **Road:**

Land Type	Units	Base Rate	NC	Adj	Site	Road	DWay	Topography	Cond	Ad Valorem	SPI	R	Tax Value	Notes
2F RES	1.840 ac	80,000	E	100	100	100	100		100	80,000	0	N	80,000	
2F RES	0.160 ac	x 2,000	X	87					95	300	0	N	300	TOPO
UNPRODUCTIVE	800.000 ff	x 100	E	100					100	80,000	0	N	0	
FARM LAND	8.000 ac	x 2,000	X	87					100	13,900	100	N	3,189	
UNMNGD PINE	15.000 ac	x 2,000	X	87					100	26,100	100	N	2,223	
UNPRODUCTIVE	6.000 ac	x 2,000	X	87					100	10,400	100	Y	81	
	31.000 ac									210,700			**85,793**	

PICTURE

OWNER

DEMERS, GEORGE J & PAULA J
DEMERS FAMILY TRUST
27 NORWOOD ROAD

SALEM, NH 03079

TAXABLE DISTRICTS

District	Percentage

PERMITS

Date	Permit ID	Permit Type	Notes
03/30/16	SA20160330	SEPTIC	STATE SUBDIVISION APPR
10/16/15	R35-5	DEMOLITION	DEMOLISH HOUSE AND BA

BUILDING DETAILS

Model:
Roof:
Ext:
Int:
Floor:
Heat:
Bedrooms: Baths: Fixtures:
Extra Kitchens: Fireplaces:
A/C: Generators:
Quality:
Com. Wall:
Stories:
Base Type:

BUILDING SUB AREA DETAILS

2013 BASE YEAR BUILDING VALUATION

Year Built:
Condition For Age: %
Physical:
Functional:
Economic:
Temporary:
%

OWNER INFORMATION

BASTIEN, JASON

36 EXETER RD

KINGSTON, NH 03848

SALES HISTORY

Date	Book	Page	Type	Price	Grantor
08/03/2006	4691	697	U I 38		BASTIEN

PICTURE

LISTING HISTORY

02/21/13	KCPU
06/25/12	KCML
03/22/11	KCPU
03/05/09	FRR
08/18/03	SH O
05/05/03	KJ X

NOTES

D-2910. NATURAL WOOD. N/C FRR 3/09, CORRECT SIDING, HEATING, & SKETCH 6/12KC, NOH EST UFF COMP 3/15KC

EXTRA FEATURES VALUATION

Feature Type	Units	Lngth x Width	Size Adj	Rate	Cond	Market Value	Notes
FIREPLACE 1-1	1		100	3,000.00	100	3,000	
						3,000	

MUNICIPAL SOFTWARE BY AVITAR

KINGSTON ASSESSING OFFICE

PARCEL TOTAL TAXABLE VALUE

Year	Building	Features	Land
2014	$ 202,800	$ 3,000	$ 86,400
		Parcel Total:	$ 292,200
2015	$ 202,800	$ 3,000	$ 86,400
		Parcel Total:	$ 292,200
2016	**$ 202,800**	**$ 3,000**	**$ 86,400**
		Parcel Total:	**$ 292,200**

LAND VALUATION

Zone: SFRAG SFR AGR **Minimum Acreage:** 1.84 **Minimum Frontage:** 200 **Site:** **Driveway:** **Road:**

Land Type	Units	Base Rate	NC	Adj	Site	Road	DWay	Topography	Cond	Ad Valorem	SPI	R	Tax Value	Notes
1F RES	1.840 ac	80,000	E	100	100	100	100		100	80,000	0	N	80,000	
1F RES	3.260 ac	x 2,000	X	98					100	6,400	0	N	6,400	
	5.100 ac									86,400			**86,400**	

PICTURE

OWNER

BASTIEN, JASON

36 EXETER RD

KINGSTON, NH 03848

TAXABLE DISTRICTS

District	Percentage

PERMITS

Date	Permit ID	Permit Type	Notes

BUILDING DETAILS

Model: **2.00 STORY FRAME GAMBREL**
Roof: **GAMBREL/ASPHALT**
Ext: **CEDAR/REDWD**
Int: **DRYWALL**
Floor: **CARPET/HARDWOOD**
Heat: **OIL/HOT WATER**
Bedrooms: **3** Baths: **1.5** Fixtures:
Extra Kitchens: Fireplaces:
A/C: **No** Generators:
Quality: **A1 AVG+10**
Com. Wall:
Size Adj: **0.9034** Base Rate: **RSA 80.00**
Bldg. Rate: **0.9836**
Sq. Foot Cost: **$ 78.69**

BUILDING SUB AREA DETAILS

ID	Description	Area	Adj.	Effect.
DEK	DECK/ENTRANCE	15	0.10	2
UFF	UPPER FLR FIN	1440	1.00	1440
FFF	FST FLR FIN	1294	1.00	1294
BMU	BSMNT	864	0.15	130
OPU	OPEN PORCH	118	0.15	18
GAR	GARAGE	576	0.45	259
GLA:	**2,734**	**4,307**		**3,143**

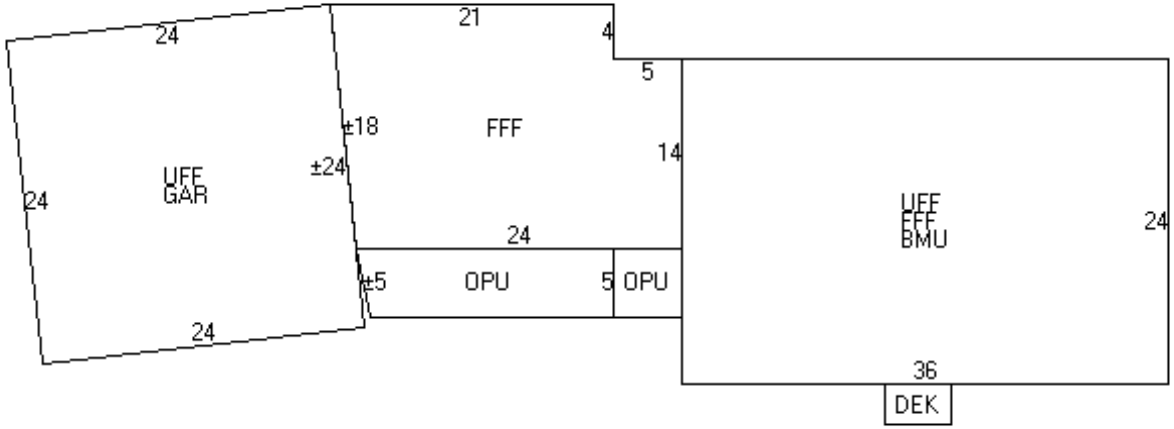

(DEK=D3R5)U27R16(UFF,FFF,BMU=D24L36)U5(OPU=L5U5)(OPU=L19[D5R1]R18U5)R5(FFF=U14L5U4L21[D18R2]R24)U18L26(UFF,GAR=XD24R24U24C)

2013 BASE YEAR BUILDING VALUATION

Market Cost New:		**$ 247,323**
Year Built:		**1971**
Condition For Age:	GOOD	**13 %**
Physical:		
Functional:	GAMBREL	**5 %**
Economic:		
Temporary:		
Total Depreciation:		**18 %**
Building Value:		**$ 202,800**

OWNER INFORMATION

BRYANT, JERROLD C., HEIRS
BASTIEN, DIANNE
40 EXETER RD

KINGSTON, NH 03848-3108

SALES HISTORY

Date	Book	Page	Type	Price	Grantor
05/02/2003	4020	563	U I 38		BRYANT

PICTURE

LISTING HISTORY

02/21/13 KCPU
06/25/12 KCM
05/05/03 KJ O

NOTES

D-2910. WHITE, REMOVE DEK, CHK 2013 FOR SHED COMP 6/12KC, SHED COMP 3/15KC

EXTRA FEATURES VALUATION

Feature Type	Units	Lngth x Width	Size Adj	Rate	Cond	Market Value	Notes
FIREPLACE 1-1	1		100	3,000.00	100	3,000	
SHED-WOOD	240	20 x 12	127	10.00	100	3,048	
						6,000	

MUNICIPAL SOFTWARE BY AVITAR

KINGSTON ASSESSING OFFICE

PARCEL TOTAL TAXABLE VALUE

Year	Building	Features	Land
2014	$ 119,100	$ 6,000	$ 88,800
		Parcel Total:	$ 213,900
2015	$ 119,100	$ 6,000	$ 88,800
		Parcel Total:	$ 213,900
2016	**$ 119,100**	**$ 6,000**	**$ 88,800**
		Parcel Total:	**$ 213,900**

LAND VALUATION

Zone: SFRAG SFR AGR **Minimum Acreage:** 1.84 **Minimum Frontage:** 200 **Site:** **Driveway:** **Road:**

Land Type	Units	Base Rate	NC	Adj	Site	Road	DWay	Topography	Cond	Ad Valorem	SPI	R	Tax Value	Notes
1F RES	1.840 ac	80,000	E	100	100	100	100		100	80,000	0	N	80,000	
1F RES	4.560 ac	x 2,000	X	97					100	8,800	0	N	8,800	
	6.400 ac									88,800			**88,800**	

PICTURE

OWNER

BRYANT, JERROLD C., HEIRS
BASTIEN, DIANNE
40 EXETER RD

KINGSTON, NH 03848-3108

TAXABLE DISTRICTS

District	Percentage

PERMITS

Date	Permit ID	Permit Type	Notes

BUILDING DETAILS

Model: **1.00 STORY FRAME RANCH**
Roof: **GABLE HIP/ASPHALT**
Ext: **VINYL SIDING**
Int: **DRYWALL**
Floor: **CARPET/LINOLEUM OR SIM**
Heat: **ELECTRIC/RAD ELECT**
Bedrooms: **2** Baths: **1.0** Fixtures:
Extra Kitchens: Fireplaces:
A/C: **No** Generators:
Quality: **A0 AVG**
Com. Wall:
Size Adj: **1.0048** Base Rate: **RSA 80.00**
Bldg. Rate: **0.9043**
Sq. Foot Cost: **$ 72.35**

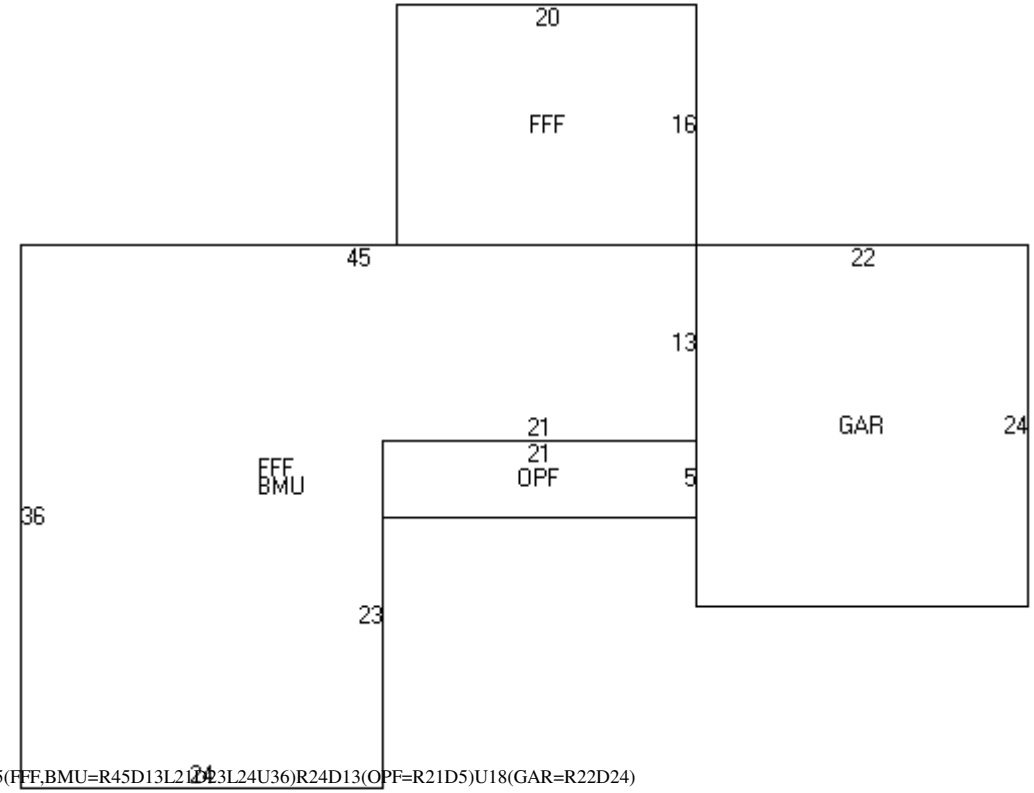

(FFF=U16L20)D16L25(FFF,BMU=R45D13L21D23L24U36)R24D13(OPF=R21D5)U18(GAR=R22D24)

BUILDING SUB AREA DETAILS

ID	Description	Area	Adj.	Effect.
FFF	FST FLR FIN	1457	1.00	1457
BMU	BSMNT	1137	0.15	171
OPF	OPEN PORCH FIN	105	0.25	26
GAR	GARAGE	528	0.45	238
GLA:	**1,457**	**3,227**		**1,892**

2013 BASE YEAR BUILDING VALUATION

Market Cost New:		**$ 136,886**
Year Built:		**1973**
Condition For Age:	GOOD	**13 %**
Physical:		
Functional:		
Economic:		
Temporary:		
Total Depreciation:		**13 %**
Building Value:		**$ 119,100**

OWNER INFORMATION

BIANCHI, PAUL J. III
BIANCHI, ANGELA J.
42 EXETER RD

KINGSTON, NH 03848

SALES HISTORY

Date	Book	Page	Type	Price	Grantor
02/19/2014	5513	2384	Q I	256,000	WATERWAY REALTY, LLC
05/25/2012	5319	1958	U I 51	141,000	US BANK NAT'L. ASSOC.
05/02/2012	5312	0418	U I 51	183,000	TIMSON, DAVID A.
01/29/2004	4227	0783	Q I	299,900	TORLA, BERNARD

PICTURE

LISTING HISTORY

06/25/12 KCM
05/14/03 BW O
05/05/03 KJ X

NOTES

PLAN 2910. WHITE.CORRECT SKETCH & INT FLRS 6/12KC

EXTRA FEATURES VALUATION

Feature Type	Units	Lngth x Width	Size Adj	Rate	Cond	Market Value	Notes
FIREPLACE 1-1	1		100	3,000.00	100	3,000	
SHED-WOOD	80	10 x 8	260	10.00	80	1,664	
LEAN-TO	140	14 x 10	174	3.00	80	585	
						5,200	

MUNICIPAL SOFTWARE BY AVITAR

KINGSTON ASSESSING OFFICE

PARCEL TOTAL TAXABLE VALUE

Year	Building	Features	Land
2014	$ 147,000	$ 5,200	$ 88,700
		Parcel Total:	$ 240,900
2015	$ 147,000	$ 5,200	$ 88,700
		Parcel Total:	$ 240,900
2016	**$ 147,000**	**$ 5,200**	**$ 88,700**
		Parcel Total:	**$ 240,900**

LAND VALUATION

Zone: SFRAG SFR AGR **Minimum Acreage:** 1.84 **Minimum Frontage:** 200 **Site:** **Driveway:** **Road:**

Land Type	Units	Base Rate	NC	Adj	Site	Road	DWay	Topography	Cond	Ad Valorem	SPI	R	Tax Value	Notes
1F RES	1.840 ac	80,000	E	100	100	100	100		100	80,000	0	N	80,000	
1F RES	4.460 ac	x 2,000	X	97					100	8,700	0	N	8,700	
	6.300 ac									88,700			**88,700**	

Map: 000R35 **Lot: 000008** **Sub: 000000** **Card: 1 of 1** **42 EXETER RD** **KINGSTON** **Printed: 07/22/2016**

PICTURE

OWNER

BIANCHI, PAUL J. III
BIANCHI, ANGELA J.
42 EXETER RD

KINGSTON, NH 03848

TAXABLE DISTRICTS

District	Percentage

PERMITS

Date	Permit ID	Permit Type	Notes
05/06/16	R35-8	NEW BUILDING	16 X 24 SHED

BUILDING DETAILS

Model: **2.00 STORY FRAME GAMBREL**
Roof: **GAMBREL/ASPHALT**
Ext: **VINYL SIDING**
Int: **DRYWALL**
Floor: **CARPET/LINOLEUM OR SIM**
Heat: **OIL/HOT WATER**
Bedrooms: **3** Baths: **2.0** Fixtures:
Extra Kitchens: Fireplaces:
A/C: **No** Generators:
Quality: **A0 AVG**
Com. Wall:
Size Adj: **0.9539** Base Rate: **RSA 80.00**
Bldg. Rate: **0.9255**
Sq. Foot Cost: **$ 74.04**

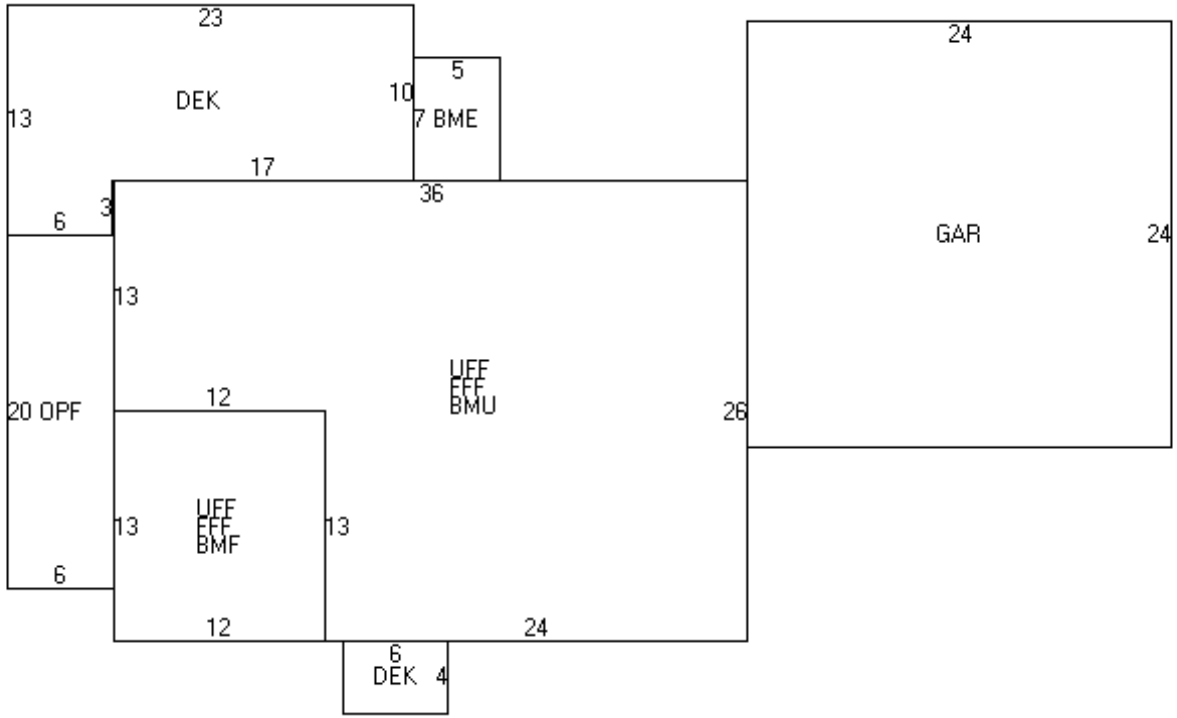

(UFF,FFF,BMU=L24U13L12U13R36D26)L24(UFF,FFF,BMF=L12U13)D13R13(DEK=R6D4)U7L19(OPF=L6U20)(DEK=U13R23D10L17D3L6)R23U3(BME=U7R5)U2R14(GAR=R24D24)

BUILDING SUB AREA DETAILS

ID	Description	Area	Adj.	Effect.
UFF	UPPER FLR FIN	936	1.00	936
FFF	FST FLR FIN	936	1.00	936
BMU	BSMNT	780	0.15	117
BMF	BSMNT FINISHED	156	0.30	47
DEK	DECK/ENTRANCE	272	0.10	27
OPF	OPEN PORCH FIN	120	0.25	30
BME	BSMT ENTRY	35	0.35	12
GAR	GARAGE	576	0.45	259
GLA:	**1,872**	**3,811**		**2,364**

2013 BASE YEAR BUILDING VALUATION

Market Cost New:		**$ 175,031**
Year Built:		**1972**
Condition For Age:	GOOD	**13 %**
Physical:	GAMBREL	**3 %**
Functional:		
Economic:		
Temporary:		
Total Depreciation:		**16 %**
Building Value:		**$ 147,000**

OWNER INFORMATION

BOLTE, MARC D.

44 EXETER ROAD

KINGSTON, NH 03848-3108

SALES HISTORY

Date	Book	Page	Type	Price	Grantor
07/31/2009	5038	1963	Q I	250,000	STLAURENT, WILLIAM A

PICTURE

LISTING HISTORY

03/27/16 KCPU
06/25/12 KCML
05/05/03 KJ X

NOTES

D-2910. GREY/ BRICK RED SHUTTERS - CHANGED BEDROOM COUNT FROM 2 TO 4 PER SEPTIC PLAN - 11/28/06 LPM - 1/07 NO FPL RW. CORRECT EXTRA FEATURES,INT FLRS & SKETCH 6/12KC, SOLAR COMP 3/16KC

EXTRA FEATURES VALUATION

Feature Type	Units	Lngth x Width	Size Adj	Rate	Cond	Market Value	Notes
SHED-WOOD	80	8 x 10	260	10.00	50	1,040	
SHED-WOOD	152	19 x 8	165	10.00	75	1,881	
						2,900	

MUNICIPAL SOFTWARE BY AVITAR

KINGSTON ASSESSING OFFICE

PARCEL TOTAL TAXABLE VALUE

Year	Building	Features	Land
2014	$ 143,400	$ 2,900	$ 88,100
		Parcel Total:	$ 234,400
2015	$ 143,400	$ 2,900	$ 88,100
		Parcel Total:	$ 234,400
2016	**$ 143,400**	**$ 2,900**	**$ 88,100**
		Parcel Total:	**$ 234,400**

LAND VALUATION

Zone: SFRAG SFR AGR **Minimum Acreage:** 1.84 **Minimum Frontage:** 200 **Site:** **Driveway:** **Road:**

Land Type	Units	Base Rate	NC	Adj	Site	Road	DWay	Topography	Cond	Ad Valorem	SPI	R	Tax Value	Notes
1F RES	1.840 ac	80,000	E	100	100	100	100		100	80,000	0	N	80,000	
1F RES	4.160 ac	x 2,000	X	97					100	8,100	0	N	8,100	
	6.000 ac									88,100			**88,100**	

Map: 000R35 **Lot: 000009** **Sub: 000000** **Card: 1 of 1** **44 EXETER RD** **KINGSTON** **Printed: 07/22/2016**

PICTURE

OWNER

BOLTE, MARC D.

44 EXETER ROAD

KINGSTON, NH 03848-3108

TAXABLE DISTRICTS

District	Percentage

PERMITS

Date	Permit ID	Permit Type	Notes
04/16/15	R35-9	ELECTRIC PERMIT	8.5.KW SOLAR ARRAY WI/2

BUILDING DETAILS

Model: **1.00 STORY FRAME RANCH**
Roof: **GABLE HIP/ASPHALT**
Ext: **WOOD SHINGLE/BR ON MASONRY**
Int: **DRYWALL**
Floor: **CARPET/HARDWOOD**
Heat: **OIL/HOT WATER**
Bedrooms: **4** Baths: **1.5** Fixtures:
Extra Kitchens: Fireplaces:
A/C: **No** Generators:
Quality: **A0 AVG**
Com. Wall:
Size Adj: **0.9791** Base Rate: **RSA 80.00**
Bldg. Rate: **0.9791**
Sq. Foot Cost: **$ 78.33**

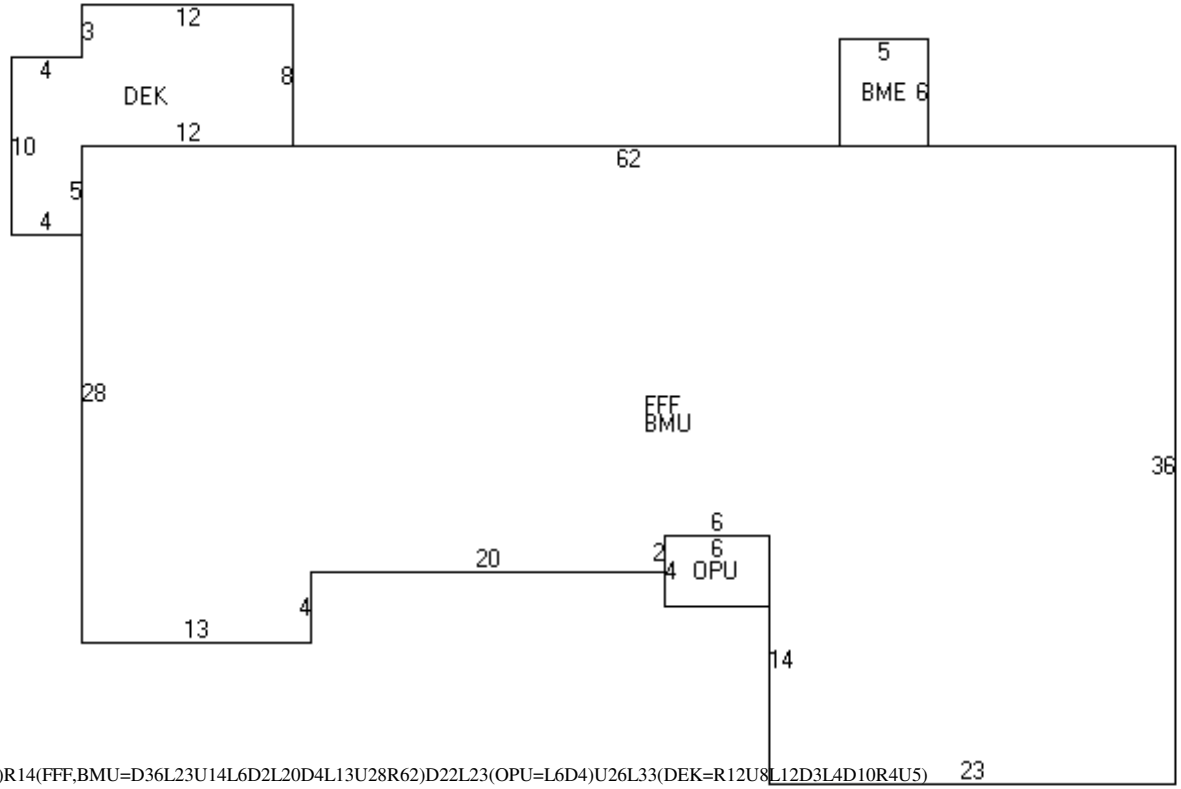

(BME=R5D6)R14(FFF,BMU=D36L23U14L6D2L20D4L13U28R62)D22L23(OPU=L6D4)U26L33(DEK=R12U8L12D3L4D10R4U5)

BUILDING SUB AREA DETAILS

ID	Description	Area	Adj.	Effect.
BME	BSMT ENTRY	30	0.35	11
FFF	FST FLR FIN	1804	1.00	1804
BMU	BSMNT	1804	0.15	271
OPU	OPEN PORCH	24	0.15	4
DEK	DECK/ENTRANCE	136	0.10	14
GLA:	**1,804**	**3,798**		**2,104**

2013 BASE YEAR BUILDING VALUATION

Market Cost New:		**$ 164,806**
Year Built:		**1970**
Condition For Age:	GOOD	**13 %**
Physical:		
Functional:		
Economic:		
Temporary:		
Total Depreciation:		**13 %**
Building Value:		**$ 143,400**

OWNER INFORMATION

CLAY POND DEVELOPMENT COMP

40 HAWKEWOOD RD

SANDOWN, NH 03873

SALES HISTORY

Date	Book	Page	Type	Price	Grantor

PICTURE

LISTING HISTORY

06/25/12 KCV
05/07/03 KJ

NOTES

VACANT, GATED PROPERTY (LOOKS LIKE SPRING WATER BUS HERE)

EXTRA FEATURES VALUATION

Feature Type	Units	Lngth x Width	Size Adj	Rate	Cond	Market Value	Notes
SHED-SOUND VALUE 5	1		100	500.00	100	500	
						500	

MUNICIPAL SOFTWARE BY AVITAR

KINGSTON ASSESSING OFFICE

PARCEL TOTAL TAXABLE VALUE

Year	Building	Features	Land
2014	$ 0	$ 500	$ 85,080
		Parcel Total:	$ 85,580
2015	$ 0	$ 500	$ 84,966
		Parcel Total:	$ 85,466
2016	**$ 0**	**$ 500**	**$ 84,966**
		Parcel Total:	**$ 85,466**

LAND VALUATION

Zone: SFRAG SFR AGR **Minimum Acreage:** 1.84 **Minimum Frontage:** 200 **Site:** **Driveway:** **Road:**

Land Type	Units	Base Rate	NC	Adj	Site	Road	DWay	Topography	Cond	Ad Valorem	SPI	R	Tax Value	Notes
1F RES	1.840 ac	80,000	E	100	100	100	100		100	80,000	0	N	80,000	
1F RES	2.160 ac	x 2,000	X	85					100	3,700	0	N	3,700	
UNMNGD OTHER	30.000 ac	x 2,000	X	85					100	51,000	100	N	1,266	
	34.000 ac									134,700			**84,966**	

PICTURE

OWNER

CLAY POND DEVELOPMENT COMP

40 HAWKEWOOD RD

SANDOWN, NH 03873

TAXABLE DISTRICTS

District	Percentage

PERMITS

Date	Permit ID	Permit Type	Notes

BUILDING DETAILS

Model:
Roof:
Ext:
Int:
Floor:
Heat:
Bedrooms: Baths: Fixtures:
Extra Kitchens: Fireplaces:
A/C: Generators:
Quality:
Com. Wall:
Stories:
Base Type:

BUILDING SUB AREA DETAILS

2013 BASE YEAR BUILDING VALUATION

Year Built:
Condition For Age: %
Physical:
Functional:
Economic:
Temporary:
%

OWNER INFORMATION

VAUTOUR, CHRISTOPHER D.

55 EXETER ROAD

KINGSTON, NH 03848

SALES HISTORY

Date	Book	Page	Type	Price	Grantor
05/15/2012	5316	593	Q I	215,000	HEY, NEIL ALAN
09/28/2007	4847	2937	Q I	277,000	LYSIK
07/31/1998	3314	978	U I 82	100,000	MEANS, JAMES P & DIANE

PICTURE

LISTING HISTORY

06/25/12 KCM
05/07/03 KJ X (BACK YARD GATED, COUL

NOTES

D-6096. TAN / WHITE. REMOVE SHED & CORRECT SKETCH 6/12KC

EXTRA FEATURES VALUATION

Feature Type	Units	Lngth x Width	Size Adj	Rate	Cond	Market Value	Notes
SHED-WOOD	96	12 x 8	227	10.00	50	1,090	
						1,100	

MUNICIPAL SOFTWARE BY AVITAR

KINGSTON ASSESSING OFFICE

PARCEL TOTAL TAXABLE VALUE

Year	Building	Features	Land
2014	$ 159,400	$ 1,100	$ 80,000
		Parcel Total:	$ 240,500
2015	$ 159,400	$ 1,100	$ 80,000
		Parcel Total:	$ 240,500
2016	**$ 159,400**	**$ 1,100**	**$ 80,000**
		Parcel Total:	**$ 240,500**

LAND VALUATION

Zone: SFRAG SFR AGR **Minimum Acreage:** 1.84 **Minimum Frontage:** 200 **Site:** **Driveway:** **Road:**

Land Type	Units	Base Rate	NC	Adj	Site	Road	DWay	Topography	Cond	Ad Valorem	SPI	R	Tax Value	Notes
1F RES	1.840 ac	80,000	E	100	100	100	100		100	80,000	0	N	80,000	
1F RES	0.010 ac	x 2,000	X	100					100	0	0	N	0	
	1.850 ac									80,000			**80,000**	

PICTURE

OWNER

VAUTOUR, CHRISTOPHER D.

55 EXETER ROAD

KINGSTON, NH 03848

TAXABLE DISTRICTS

District	Percentage

PERMITS

Date	Permit ID	Permit Type	Notes
04/03/86	R35-11	ACCESSORY OUTBLD	12' X 16' SHED

BUILDING DETAILS

Model: **1.50 STORY FRAME SPLITLEVEL**
Roof: **GABLE HIP/ASPHALT**
Ext: **VINYL SIDING**
Int: **DRYWALL**
Floor: **CARPET/LINOLEUM OR SIM**
Heat: **OIL/HOT WATER**
Bedrooms: **3** Baths: **2.0** Fixtures:
Extra Kitchens: Fireplaces:
A/C: **Yes 100.00 %** Generators:
Quality: **A1 AVG+10**
Com. Wall:
Size Adj: **0.9831** Base Rate: **RSA 80.00**
Bldg. Rate: **1.0704**
Sq. Foot Cost: **$ 85.63**

BUILDING SUB AREA DETAILS

ID	Description	Area	Adj.	Effect.
DEK	DECK/ENTRANCE	201	0.10	20
FFF	FST FLR FIN	1320	1.00	1320
BMF	BSMNT FINISHED	1128	0.30	338
EPF	ENCLSD PORCH	78	0.70	55
OPU	OPEN PORCH	46	0.15	7
GAR	GARAGE	729	0.45	328
GLA:	**1,375**	**3,502**		**2,068**

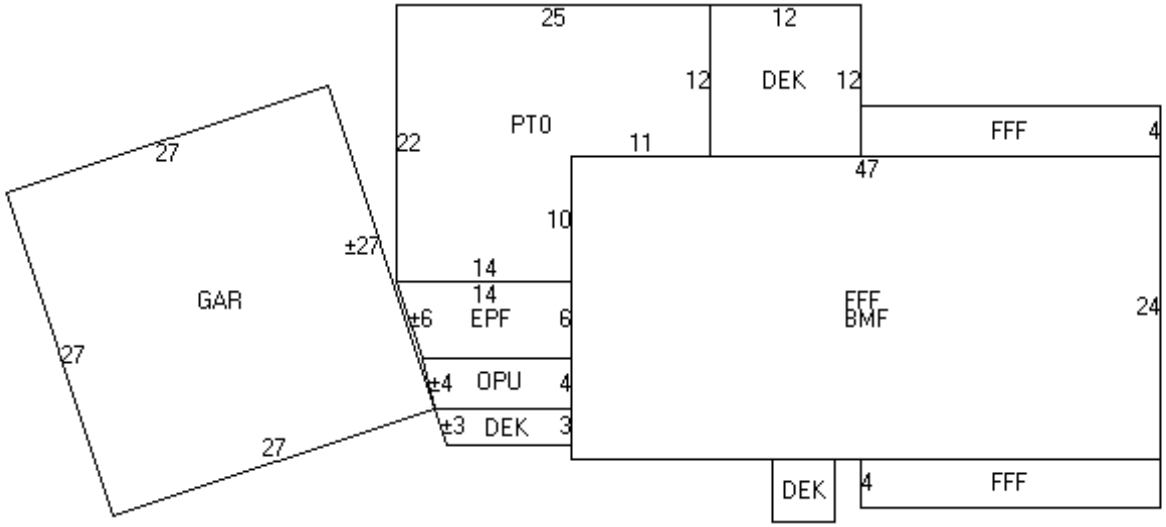

(DEK=U5R5)R2(FFF=D4R24)U4(FFF,BMF=U24L47)R47(FFF=U4L24)D4(DEK=U12L12)(PT0=L25D22R14U10R11U12)D22L11(EPF=L14[D6R2]R12U6)D6(OPU=L12[D4R1]R11U4)D4(DEK=L11[D3R1]R10U3)L11(GAR=XD27L27U27C)

2013 BASE YEAR BUILDING VALUATION

Market Cost New:		**$ 177,083**
Year Built:		**1990**
Condition For Age:	GOOD	**10 %**
Physical:		
Functional:		
Economic:		
Temporary:		
Total Depreciation:		**10 %**
Building Value:		**$ 159,400**

OWNER INFORMATION

CALLAHAN, CAROLE L.

53 EXETER RD

KINGSTON, NH 03848

SALES HISTORY

Date	Book	Page	Type	Price	Grantor
06/12/2012	5324	2231	U I 38	253,466	CALLAHAN, JOHN PAUL
01/23/2007	4758	1614	U I 38		CALLAHAN, CAROLE
07/31/2000	3492	2592	Q I	161,133	BRADBROOK

PICTURE

LISTING HISTORY

06/25/12 KCM
05/07/03 KJ R

NOTES

D-6096. YELLOW. OWNER REFUSED ENTRY. DENIED INT CORRECT SKETCH, REMOVE GAR 6/12KC

EXTRA FEATURES VALUATION

Feature Type	Units	Lngth x Width	Size Adj	Rate	Cond	Market Value	Notes
FIREPLACE 1-1	3		100	3,000.00	100	9,000	
BARN	666	37 x 18	84	16.20	60	5,438	
						14,400	

MUNICIPAL SOFTWARE BY AVITAR

KINGSTON ASSESSING OFFICE

PARCEL TOTAL TAXABLE VALUE

Year	Building	Features	Land
2014	$ 114,400	$ 14,400	$ 80,300
		Parcel Total:	$ 209,100
2015	$ 114,400	$ 14,400	$ 80,300
		Parcel Total:	$ 209,100
2016	**$ 114,400**	**$ 14,400**	**$ 80,300**
		Parcel Total:	**$ 209,100**

LAND VALUATION

Zone: SFRAG SFR AGR **Minimum Acreage:** 1.84 **Minimum Frontage:** 200 **Site:** **Driveway:** **Road:**

Land Type	Units	Base Rate	NC	Adj	Site	Road	DWay	Topography	Cond	Ad Valorem	SPI	R	Tax Value	Notes
1F RES	1.840 ac	80,000	E	100	100	100	100		100	80,000	0	N	80,000	
1F RES	0.160 ac	x 2,000	X	100					100	300	0	N	300	
	2.000 ac									80,300			**80,300**	

Map: 000R35 **Lot: 000012** **Sub: 000000** **Card: 1 of 1** **53 EXETER RD** **KINGSTON** **Printed: 07/22/2016**

PICTURE

OWNER

CALLAHAN, CAROLE L.

53 EXETER RD

KINGSTON, NH 03848

TAXABLE DISTRICTS

District	Percentage

PERMITS

Date	Permit ID	Permit Type	Notes

BUILDING DETAILS

Model: **2.00 STORY FRAME COLONIAL**
Roof: **GABLE HIP/ASPHALT**
Ext: **VINYL SIDING**
Int: **DRYWALL**
Floor: **CARPET/LINOLEUM OR SIM**
Heat: **OIL/HOT WATER**
Bedrooms: **3** Baths: **2.0** Fixtures:
Extra Kitchens: Fireplaces:
A/C: **No** Generators:
Quality: **A1 AVG+10**
Com. Wall:
Size Adj: **0.9865** Base Rate: **RSA 80.00**
Bldg. Rate: **1.0315**
Sq. Foot Cost: **$ 82.52**

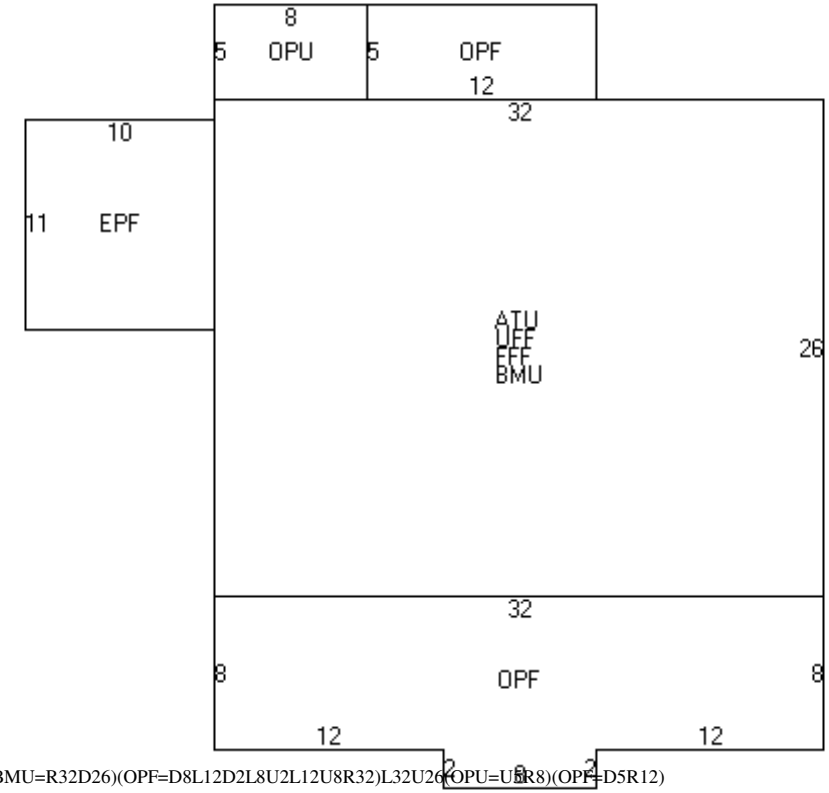

(EPF=U11R10)U1(ATU,UFF,FFF,BMU=R32D26)(OPF=D8L12D2L8U2L12U8R32)L32U26(OPU=U5R8)(OPF=D5R12)

BUILDING SUB AREA DETAILS

ID	Description	Area	Adj.	Effect.
EPF	ENCLSD PORCH	110	0.70	77
ATU	ATTIC	832	0.10	83
UFF	UPPER FLR FIN	832	1.00	832
FFF	FST FLR FIN	832	1.00	832
BMU	BSMNT	832	0.15	125
OPF	OPEN PORCH FIN	332	0.25	83
OPU	OPEN PORCH	40	0.15	6
GLA:	**1,741**	**3,810**		**2,038**

2013 BASE YEAR BUILDING VALUATION

Market Cost New:		**$ 168,176**
Year Built:		**1845**
Condition For Age:	AVERAGE	**32 %**
Physical:		
Functional:		
Economic:		
Temporary:		
Total Depreciation:		**32 %**
Building Value:		**$ 114,400**

OWNER INFORMATION

PETTIS, CANDACE
MURRAY, NOLAN
51 EXETER ROAD

KINGSTON, NH 03848

SALES HISTORY

Date	Book	Page	Type	Price	Grantor
12/15/2010	5176	1180	Q I	277,533	TAYLOR, SH & NAVINS, R
10/09/2003	4170	105	Q I	399,000	FRASER

PICTURE

LISTING HISTORY

06/25/12	KCML	
03/05/09	FRR	N/C ON CYCLICAL
03/30/06	JARX	P/U SHOP 100% (ATTACHED
05/07/03	KJ X	LIST FOR REVAL

NOTES

GREY, CORRECT EXTRA FEATURES,INT FLRS,HEAT FULE, QUALITY, & SKETCH 6/12KC

EXTRA FEATURES VALUATION

Feature Type	Units	Lngth x Width	Size Adj	Rate	Cond	Market Value	Notes
FIREPLACE 3-1	1		100	5,000.00	100	5,000	
BARN	1,274	49 x 26	73	16.20	70	10,546	
SHED-WOOD	192	12 x 16	143	10.00	70	1,922	
SHOP-1	869	11 x 79	78	34.00	90	20,741	
SHED-WOOD	96	8 x 12	227	10.00	80	1,743	
						40,000	

MUNICIPAL SOFTWARE BY AVITAR

KINGSTON ASSESSING OFFICE

PARCEL TOTAL TAXABLE VALUE

Year	Building	Features	Land
2014	$ 269,200	$ 40,000	$ 127,300
		Parcel Total:	$ 436,500
2015	$ 269,200	$ 40,000	$ 127,300
		Parcel Total:	$ 436,500
2016	**$ 269,200**	**$ 40,000**	**$ 127,300**
		Parcel Total:	**$ 436,500**

LAND VALUATION

Zone: SFRAG SFR AGR **Minimum Acreage:** 1.84 **Minimum Frontage:** 200 **Site:** **Driveway:** **Road:**

Land Type	Units	Base Rate	NC	Adj	Site	Road	DWay	Topography	Cond	Ad Valorem	SPI	R	Tax Value	Notes
2F RES	1.840 ac	80,000	E	100	100	100	100		100	80,000	0	N	80,000	
2F RES	4.160 ac	x 2,000	X	97					90	7,300	0	N	7,300	TOPO
2F RES	400.000 ff	x 100	E	100					100	40,000	0	N	40,000	
	6.000 ac									127,300			**127,300**	

PICTURE

OWNER

PETTIS, CANDACE
MURRAY, NOLAN
51 EXETER ROAD

KINGSTON, NH 03848

TAXABLE DISTRICTS

District	Percentage

PERMITS

Date	Permit ID	Permit Type	Notes
09/30/08	R35-13	ACCESSORY OUTBLD	24'X48' POLE BARN
11/26/07	R35-13	ALTERATION	WINTERIZE CARRIAGE HS/
09/30/05	R35-13	ADDITION	20 X 24 WORKSHOP

BUILDING DETAILS

Model: **2.50 STORY FRAME COLONIAL**
Roof: **GABLE HIP/ASPHALT**
Ext: **CLAP BOARD**
Int: **DRYWALL/PLASTERED**
Floor: **PINE/SOFT WD**
Heat: **GAS/HOT WATER**
Bedrooms: **4** Baths: **2.5** Fixtures:
Extra Kitchens: Fireplaces:
A/C: **No** Generators:
Quality: **A3 AVG+30**
Com. Wall:
Size Adj: **0.8549** Base Rate: **RSA 80.00**
Bldg. Rate: **1.0457**
Sq. Foot Cost: **$ 83.66**

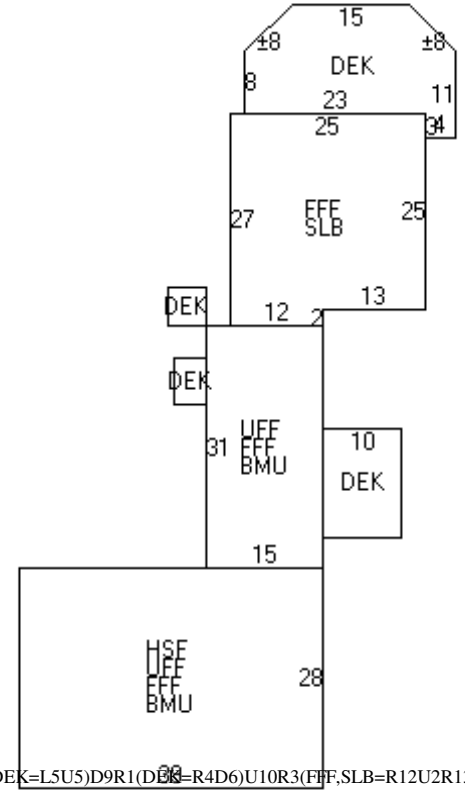

(HSF,UFF,FFF,BMU=R39U28)(UFF,FFF,BMU=L15U31)(DEK=L5U5)D9R1(DEK=R4D6)U10R3(FFF,SLB=R12U2R13U25L25D27)R12D13(DEK=R10D14)L20U54(DEK=U8[R6U6]R15[R6D6]D11L4U3L23)

BUILDING SUB AREA DETAILS

ID	Description	Area	Adj.	Effect.
DEK	DECK/ENTRANCE	543	0.10	54
HSF	1/2 STRY FIN	1092	0.50	546
UFF	UPPER FLR FIN	1557	1.00	1557
FFF	FST FLR FIN	2206	1.00	2206
BMU	BSMNT	1557	0.15	234
SLB	SLAB	649	0.00	0
GLA:	**4,309**	**7,604**		**4,597**

2013 BASE YEAR BUILDING VALUATION

Market Cost New:		**$ 384,585**
Year Built:		**1870**
Condition For Age:	AVERAGE	**30 %**
Physical:		
Functional:		
Economic:		
Temporary:		
Total Depreciation:		**30 %**
Building Value:		**$ 269,200**

OWNER INFORMATION

DANGREMOND, SUSAN Q. TRUSTEE
SUSAN Q. DANGREMOND REV. TRUST
PO BOX 126

KINGSTON, NH 03848-0126

SALES HISTORY

Date	Book	Page	Type	Price	Grantor
03/30/2010	5099	160	U I 38		DANGREMOND, SUSAN Q. T
02/25/2010	5091	2240	U I 38		DANGREMOND, SUSAN Q. T
08/02/1977	2289	711	U I 82		WOLFSON, AARON

PICTURE

LISTING HISTORY

06/25/12 KCM
06/25/12 KCM
04/15/08 KCO
05/09/03 KJ O

NOTES

RED / YELLOW TRIM 32 A VACANT R35-32 OWNS IT, KITCHN 100% COMP 4/08 KC.

EXTRA FEATURES VALUATION

Feature Type	Units	Lngth x Width	Size Adj	Rate	Cond	Market Value	Notes
FIREPLACE 2-1	1		100	4,000.00	100	4,000	
						4,000	

MUNICIPAL SOFTWARE BY AVITAR

KINGSTON ASSESSING OFFICE

PARCEL TOTAL TAXABLE VALUE

Year	Building	Features	Land
2014	$ 132,900	$ 4,000	$ 85,400
		Parcel Total:	$ 222,300
2015	$ 132,900	$ 4,000	$ 85,400
		Parcel Total:	$ 222,300
2016	**$ 132,900**	**$ 4,000**	**$ 85,400**
		Parcel Total:	**$ 222,300**

LAND VALUATION

Zone: SFRAG SFR AGR **Minimum Acreage:** 1.84 **Minimum Frontage:** 200 **Site:** **Driveway:** **Road:**

Land Type	Units	Base Rate	NC	Adj	Site	Road	DWay	Topography	Cond	Ad Valorem	SPI	R	Tax Value	Notes
1F RES	1.150 ac	77,600	F	110	100	100	100		100	85,400	0	N	85,400	
	1.150 ac									85,400			**85,400**	

Map: 000R35 **Lot: 000032** **Sub: 000000** **Card: 1 of 1** **43 EXETER RD** **KINGSTON** **Printed: 07/22/2016**

PICTURE

OWNER

DANGREMOND, SUSAN Q. TRUSTEE
SUSAN Q. DANGREMOND REV. TRUST
PO BOX 126

KINGSTON, NH 03848-0126

TAXABLE DISTRICTS

District	Percentage

PERMITS

Date	Permit ID	Permit Type	Notes
02/12/08	R35-32	ALTERATION	COMPLETE KITCHEN REM

BUILDING DETAILS

Model: **1.50 STORY FRAME CAPE**
Roof: **GABLE HIP/ASPHALT**
Ext: **CLAP BOARD**
Int: **DRYWALL**
Floor: **HARDWOOD/LINOLEUM OR SIM**
Heat: **OIL/HOT WATER**
Bedrooms: **2** Baths: **1.5** Fixtures:
Extra Kitchens: Fireplaces:
A/C: **No** Generators:
Quality: **A0 AVG**
Com. Wall:
Size Adj: **0.9444** Base Rate: **RSA 80.00**
Bldg. Rate: **0.8700**
Sq. Foot Cost: **$ 69.60**

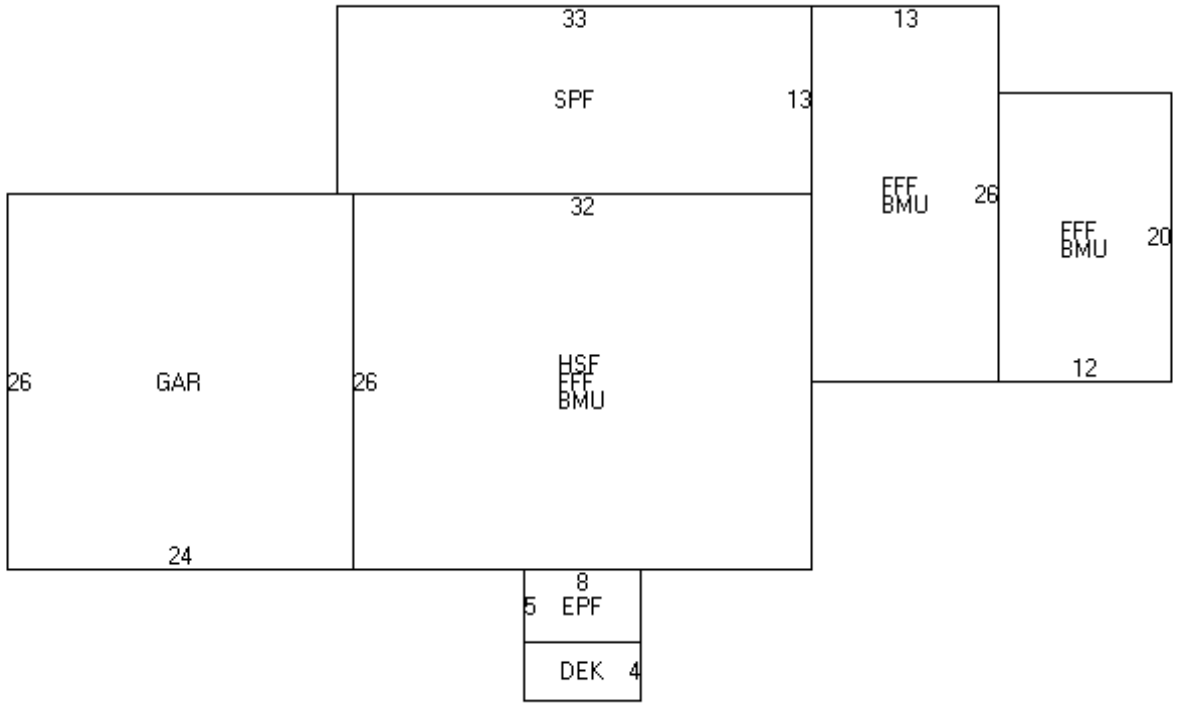

(SPF=R33D13)(HSF,FFF,BMU=L32D26)(GAR=L24U26)U13R56(FFF,BMU=R13D26)(FFF,BMU=R12U20)L37D33(EPF=L8D5)(DEK=R8D4)

BUILDING SUB AREA DETAILS

ID	Description	Area	Adj.	Effect.
SPF	SCREEN PORCH	429	0.30	129
HSF	1/2 STRY FIN	832	0.50	416
FFF	FST FLR FIN	1410	1.00	1410
BMU	BSMNT	1410	0.15	212
GAR	GARAGE	624	0.45	281
EPF	ENCLSD PORCH	40	0.70	28
DEK	DECK/ENTRANCE	32	0.10	3
GLA:	**1,854**	**4,777**		**2,479**

2013 BASE YEAR BUILDING VALUATION

Market Cost New:		**$ 172,538**
Year Built:		**1932**
Condition For Age:	AVERAGE	**23 %**
Physical:		
Functional:		
Economic:		
Temporary:		
Total Depreciation:		**23 %**
Building Value:		**$ 132,900**

OWNER INFORMATION

MASON, DAVID E.

37 EXETER RD

KINGSTON, NH 03848-3110

SALES HISTORY

Date	Book	Page	Type	Price	Grantor
08/22/2012	5348	0550	U I 38		MASON, KRISTAN J
10/21/2002	3851	1237	Q I	220,000	THURSTON, DAVID E

PICTURE

LISTING HISTORY

06/22/12	KCML	CORRECT SIDING, AND SKE'
06/02/03	BW O	CK LISTING
05/13/03	KJ X	LIST FOR REVAL

NOTES

B0050B. TAN.

EXTRA FEATURES VALUATION

Feature Type	Units	Lngth x Width	Size Adj	Rate	Cond	Market Value	Notes
FIREPLACE 1-1	1		100	3,000.00	100	3,000	
GARAGE	484	22 x 22	93	30.00	90	12,153	
						15,200	

MUNICIPAL SOFTWARE BY AVITAR

KINGSTON ASSESSING OFFICE

PARCEL TOTAL TAXABLE VALUE

Year	Building	Features	Land
2014	$ 96,400	$ 15,200	$ 77,000
		Parcel Total:	$ 188,600
2015	$ 96,400	$ 15,200	$ 77,000
		Parcel Total:	$ 188,600
2016	**$ 96,400**	**$ 15,200**	**$ 77,000**
		Parcel Total:	**$ 188,600**

LAND VALUATION

Zone: SFRAG SFR AGR **Minimum Acreage:** 1.84 **Minimum Frontage:** 200 **Site:** **Driveway:** **Road:**

Land Type	Units	Base Rate	NC	Adj	Site	Road	DWay	Topography	Cond	Ad Valorem	SPI	R	Tax Value	Notes
1F RES	1.000 ac	77,000	E	100	100	100	100		100	77,000	0	N	77,000	
	1.000 ac									77,000			**77,000**	

Map: 000R35 **Lot: 000042** **Sub: 000000** **Card: 1 of 1** **37 EXETER RD** **KINGSTON** **Printed: 07/22/2016**

PICTURE

OWNER

MASON, DAVID E.

37 EXETER RD

KINGSTON, NH 03848-3110

TAXABLE DISTRICTS

District	Percentage

PERMITS

Date	Permit ID	Permit Type	Notes

BUILDING DETAILS

Model: **1.00 STORY FRAME RANCH**
Roof: **GABLE HIP/ASPHALT**
Ext: **VINYL SIDING**
Int: **DRYWALL**
Floor: **HARDWOOD/LINOLEUM OR SIM**
Heat: **OIL/HOT WATER**
Bedrooms: **3** Baths: **1.5** Fixtures:
Extra Kitchens: Fireplaces:
A/C: **No** Generators:
Quality: **A0 AVG**
Com. Wall:
Size Adj: **1.1008** Base Rate: **RSA 80.00**
Bldg. Rate: **1.0568**
Sq. Foot Cost: **$ 84.54**

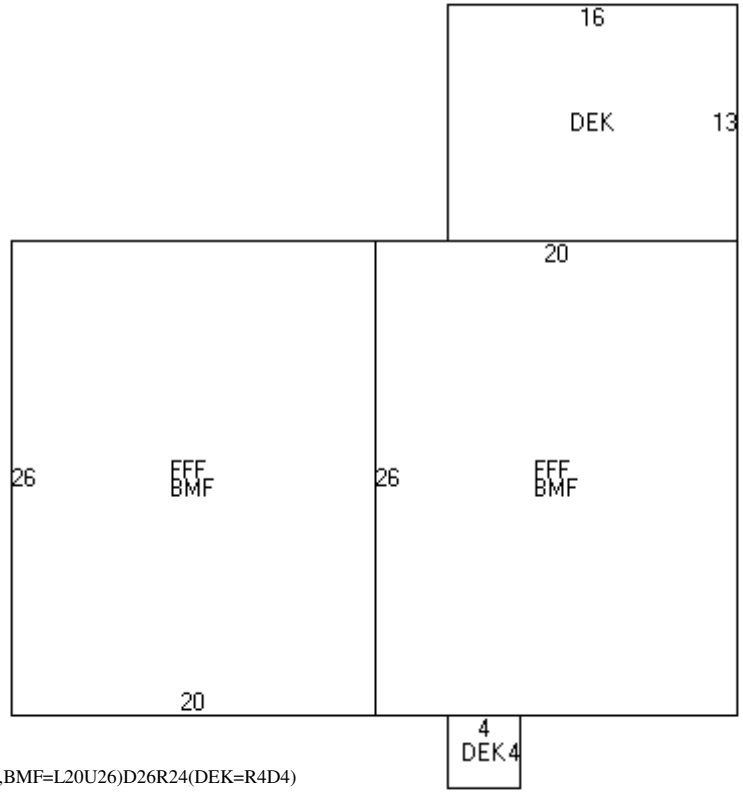

(DEK=R16D13)(FFF,BMF=L20D26)(FFF,BMF=L20U26)D26R24(DEK=R4D4)

BUILDING SUB AREA DETAILS

ID	Description	Area	Adj.	Effect.
DEK	DECK/ENTRANCE	224	0.10	22
FFF	FST FLR FIN	1040	1.00	1040
BMF	BSMNT FINISHED	1040	0.30	312
GLA:	**1,040**	**2,304**		**1,374**

2013 BASE YEAR BUILDING VALUATION

Market Cost New:		**$ 116,158**
Year Built:		**1972**
Condition For Age:	AVERAGE	**16 %**
Physical:		
Functional:	BMFFLRS	**1 %**
Economic:		
Temporary:		
Total Depreciation:		**17 %**
Building Value:		**$ 96,400**

OWNER INFORMATION

BULLERWELL, GRACE

27 EXETER RD

KINGSTON, NH 03848-3109

SALES HISTORY

Date	Book	Page	Type	Price	Grantor

PICTURE

LISTING HISTORY

03/02/15	KCPU
06/18/12	KCML
05/31/03	BW O
05/14/03	KJ X

NOTES

D-14253 TAN / WHITE TRIM, CHNG ROOF,FPL=GAS 6/12KC

EXTRA FEATURES VALUATION

Feature Type	Units	Lngth x Width	Size Adj	Rate	Cond	Market Value	Notes
FIREPLACE GAS	1		100	2,500.00	100	2,500	
						2,500	

MUNICIPAL SOFTWARE BY AVITAR.

KINGSTON ASSESSING OFFICE

PARCEL TOTAL TAXABLE VALUE

Year	Building	Features	Land
2014	$ 178,300	$ 2,500	$ 80,300
		Parcel Total:	$ 261,100
2015	$ 178,300	$ 2,500	$ 80,300
		Parcel Total:	$ 261,100
2016	**$ 178,300**	**$ 2,500**	**$ 80,300**
		Parcel Total:	**$ 261,100**

LAND VALUATION

Zone: SFRAG SFR AGR **Minimum Acreage:** 1.84 **Minimum Frontage:** 200 **Site:** **Driveway:** **Road:**

Land Type	Units	Base Rate	NC	Adj	Site	Road	DWay	Topography	Cond	Ad Valorem	SPI	R	Tax Value	Notes
1F RES	1.840 ac	80,000	E	100	100	100	100		100	80,000	0	N	80,000	
1F RES	0.160 ac	x 2,000	X	100					100	300	0	N	300	
	2.000 ac									80,300			**80,300**	

PICTURE

OWNER

BULLERWELL, GRACE

27 EXETER RD

KINGSTON, NH 03848-3109

TAXABLE DISTRICTS

District	Percentage

PERMITS

Date	Permit ID	Permit Type	Notes
08/04/14	R35-45-1	ELECTRIC PERMIT	ELECTRIC
07/31/14	R35-45-1	MECHANICAL PERMI	GAS PIPING FOR GENERAT

BUILDING DETAILS

Model: **1.75 STORY FRAME CAPE**
Roof: **GABLE HIP/ASPHALT**
Ext: **VINYL SIDING**
Int: **DRYWALL**
Floor: **CARPET/HARDWOOD**
Heat: **OIL/HOT WATER**
Bedrooms: **2** Baths: **1.5** Fixtures:
Extra Kitchens: Fireplaces:
A/C: **No** Generators:
Quality: **A1 AVG+10**
Com. Wall:
Size Adj: **0.9417** Base Rate: **RSA 80.00**
Bldg. Rate: **0.9845**
Sq. Foot Cost: **$ 78.76**

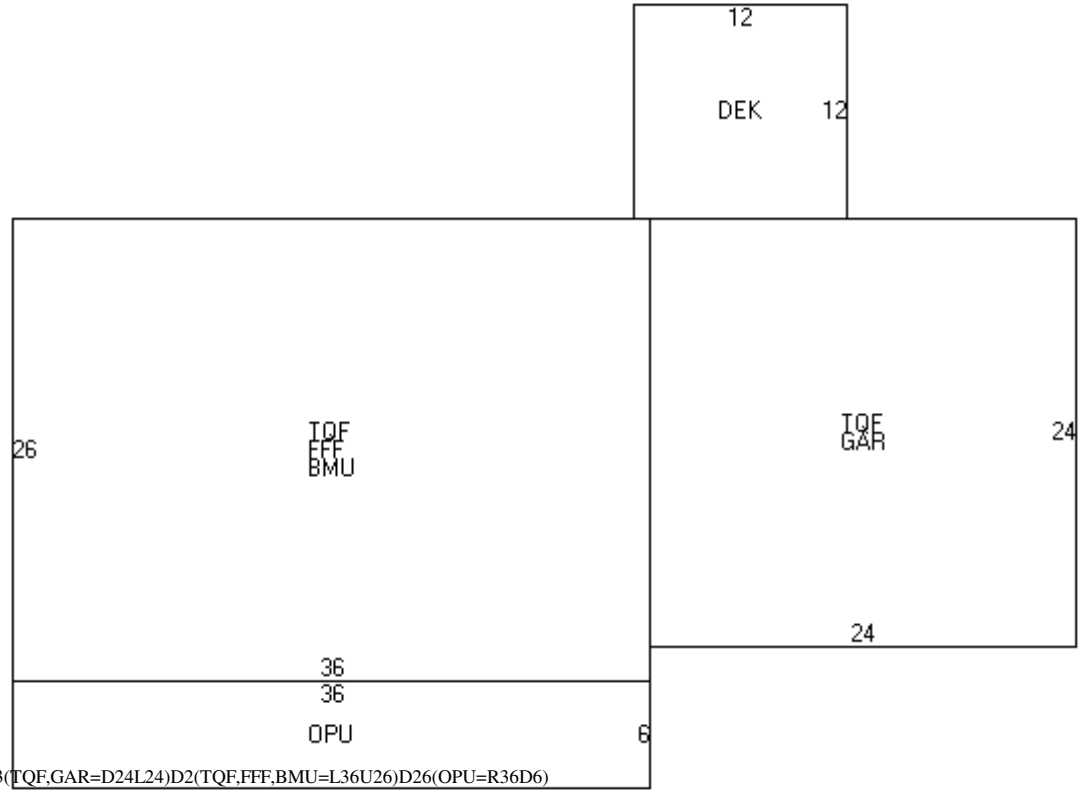

(DEK=R12D12)R13(TQF,GAR=D24L24)D2(TQF,FFF,BMU=L36U26)D26(OPU=R36D6)

BUILDING SUB AREA DETAILS

ID	Description	Area	Adj.	Effect.
DEK	DECK/ENTRANCE	144	0.10	14
TQF	3/4 STRY FIN	1512	0.75	1134
GAR	GARAGE	576	0.45	259
FFF	FST FLR FIN	936	1.00	936
BMU	BSMNT	936	0.15	140
OPU	OPEN PORCH	216	0.15	32
GLA:	**2,070**	**4,320**		**2,515**

2013 BASE YEAR BUILDING VALUATION

Market Cost New:		**$ 198,081**
Year Built:		**1990**
Condition For Age:	GOOD	**10 %**
Physical:		
Functional:		
Economic:		
Temporary:		
Total Depreciation:		**10 %**
Building Value:		**$ 178,300**

OWNER INFORMATION

LUCIA, STEPHEN & SANDRA, TR
LUCIA FAMILY TRUST OF 1999
29 EXETER RD

KINGSTON, NH 03848-3109

SALES HISTORY

Date	Book	Page	Type	Price	Grantor

PICTURE

LISTING HISTORY

03/18/15	KCPU
06/18/12	KCM
05/19/03	BW O
05/14/03	KJ X

NOTES

GRAY / YELLOW TRIM, CORRECT LABELING-SIDING-&STRY HEIGHT 6/12KC, POOL COMP 3/15KC

EXTRA FEATURES VALUATION

Feature Type	Units	Lngth x Width	Size Adj	Rate	Cond	Market Value	Notes
FIREPLACE 1-1	1		100	3,000.00	100	3,000	
SHED-WOOD	112	14 x 8	203	10.00	100	2,274	
POOL ABOVE GROUND	450		96	13.00	100	5,616	
						10,900	

MUNICIPAL SOFTWARE BY AVITAR.

KINGSTON ASSESSING OFFICE

PARCEL TOTAL TAXABLE VALUE

Year	Building	Features	Land
2014	$ 189,200	$ 9,800	$ 82,900
		Parcel Total:	$ 281,900
2015	$ 189,200	$ 10,900	$ 82,900
		Parcel Total:	$ 283,000
2016	**$ 189,200**	**$ 10,900**	**$ 82,900**
		Parcel Total:	**$ 283,000**

LAND VALUATION

Zone: SFRAG SFR AGR **Minimum Acreage:** 1.84 **Minimum Frontage:** 200 **Site:** **Driveway:** **Road:**

Land Type	Units	Base Rate	NC	Adj	Site	Road	DWay	Topography	Cond	Ad Valorem	SPI	R	Tax Value	Notes
1F RES	1.840 ac	80,000	E	100	100	100	100		100	80,000	0	N	80,000	
1F RES	1.440 ac	x 2,000	X	100					100	2,900	0	N	2,900	
	3.280 ac									82,900			**82,900**	

Map: 000R35 **Lot: 000045** **Sub: 000002** **Card: 1 of 1** **29 EXETER RD** **KINGSTON** **Printed: 07/22/2016**

PICTURE

OWNER

LUCIA, STEPHEN & SANDRA, TR
LUCIA FAMILY TRUST OF 1999
29 EXETER RD

KINGSTON, NH 03848-3109

TAXABLE DISTRICTS

District	Percentage

PERMITS

Date	Permit ID	Permit Type	Notes
06/17/14	R35-45	REPAIR	REPLACE EXISTING POOL

BUILDING DETAILS

Model: **2.00 STORY FRAME GARRISON**
Roof: **GABLE HIP/ASPHALT**
Ext: **CEDAR/REDWD**
Int: **DRYWALL**
Floor: **CARPET**
Heat: **OIL/HOT WATER**
Bedrooms: **4** Baths: **2.5** Fixtures:
Extra Kitchens: Fireplaces:
A/C: **No** Generators:
Quality: **A1 AVG+10**
Com. Wall:
Size Adj: **0.9371** Base Rate: **RSA 80.00**
Bldg. Rate: **1.0203**
Sq. Foot Cost: **$ 81.62**

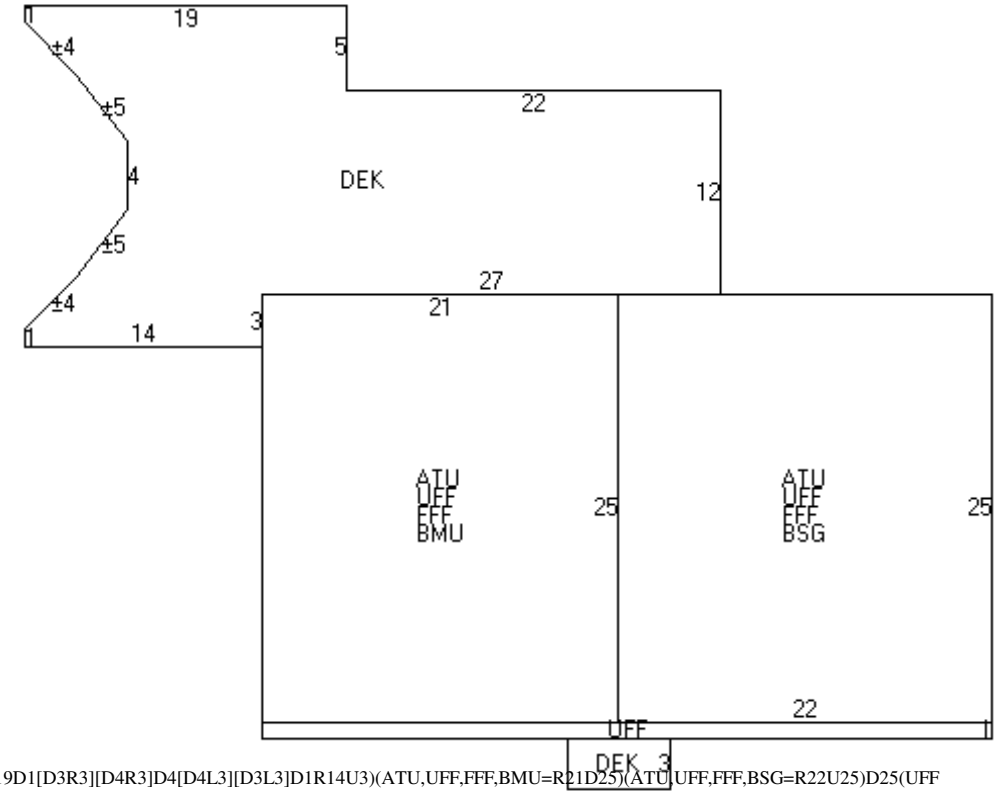

(DEK=R27U12L22U5L19D1[D3R3][D4R3]D4[D4L3][D3L3]D1R14U3)(ATU,UFF,FFF,BMU=R21D25)(ATU,UFF,FFF,BSG=R22U25)D25(UFF=D1L43)R18(DEK=R6D3)

BUILDING SUB AREA DETAILS

ID	Description	Area	Adj.	Effect.
DEK	DECK/ENTRANCE	578	0.10	58
ATU	ATTIC	1075	0.10	108
UFF	UPPER FLR FIN	1118	1.00	1118
FFF	FST FLR FIN	1075	1.00	1075
BMU	BSMNT	525	0.15	79
BSG	BSMT GAR	550	0.25	138
GLA:	**2,193**	**4,921**		**2,576**

2013 BASE YEAR BUILDING VALUATION

Market Cost New:		**$ 210,253**
Year Built:		**1987**
Condition For Age:	GOOD	**10 %**
Physical:		
Functional:		
Economic:		
Temporary:		
Total Depreciation:		**10 %**
Building Value:		**$ 189,200**

OWNER INFORMATION

ELLIOTT, HANNAH C
BUNKE, SETH
23 EXETER RD.

KINGSTON, NH 03848

SALES HISTORY

Date	Book	Page	Type	Price	Grantor
07/18/2016	5734	168	Q I	286,000	ANDERSON, HEATHER R.
05/07/2007	4796	734	Q I	329,000	BALLING
06/30/2006	4676	210	Q I	350,000	DEVLIN

PICTURE

LISTING HISTORY

06/18/12	KCM	
03/21/12	KCPU	NC FOR SHED DROP PU
03/22/11	KCPU	CHNG EPU TO EPF, NO SHED
07/20/07	JARX	P/U GAR AND BARN PER SEI
05/14/03	KJ X	

NOTES

C-11614. WHTE / BLACK SHUTTERS.

EXTRA FEATURES VALUATION

Feature Type	Units	Lngth x Width	Size Adj	Rate	Cond	Market Value	Notes
BARN /LOFT	1,332	1332 x 1	72	18.00	75	12,947	
BARN /LOFT	800	800 x 1	80	18.00	75	8,640	
GARAGE	380	380 x 1	102	30.00	75	8,721	
						30,300	

MUNICIPAL SOFTWARE BY AVITAR

KINGSTON ASSESSING OFFICE

PARCEL TOTAL TAXABLE VALUE

Year	Building	Features	Land
2014	$ 108,100	$ 30,300	$ 81,500
		Parcel Total:	$ 219,900
2015	$ 108,100	$ 30,300	$ 81,500
		Parcel Total:	$ 219,900
2016	**$ 108,100**	**$ 30,300**	**$ 81,500**
		Parcel Total:	**$ 219,900**

LAND VALUATION

Zone: SFRAG SFR AGR **Minimum Acreage:** 1.84 **Minimum Frontage:** 200 **Site:** **Driveway:** **Road:**

Land Type	Units	Base Rate	NC	Adj	Site	Road	DWay	Topography	Cond	Ad Valorem	SPI	R	Tax Value	Notes
1F RES	1.840 ac	80,000	E	100	100	100	100		100	80,000	0	N	80,000	
1F RES	0.770 ac	x 2,000	X	100					100	1,500	0	N	1,500	
	2.610 ac									81,500			**81,500**	

Map: 000R35 **Lot: 00045A** **Sub: 000000** **Card: 1 of 1** **23 EXETER RD** **KINGSTON** **Printed: 07/22/2016**

PICTURE

OWNER

ELLIOTT, HANNAH C
BUNKE, SETH
23 EXETER RD.

KINGSTON, NH 03848

TAXABLE DISTRICTS

District	Percentage

PERMITS

Date	Permit ID	Permit Type	Notes
05/10/10	R35-45A	NEW BUILDING	10 X 32 SHED

BUILDING DETAILS

Model: **2.00 STORY FRAME COLONIAL**
Roof: **GABLE HIP/ASPHALT**
Ext: **CLAP BOARD**
Int: **DRYWALL/PLASTERED**
Floor: **HARDWOOD/LINOLEUM OR SIM**
Heat: **OIL/HOT WATER**
Bedrooms: **2** Baths: **1.5** Fixtures:
Extra Kitchens: Fireplaces:
A/C: **No** Generators:
Quality: **A0 AVG**
Com. Wall:
Size Adj: **0.9497** Base Rate: **RSA 80.00**
Bldg. Rate: **0.8749**
Sq. Foot Cost: **$ 69.99**

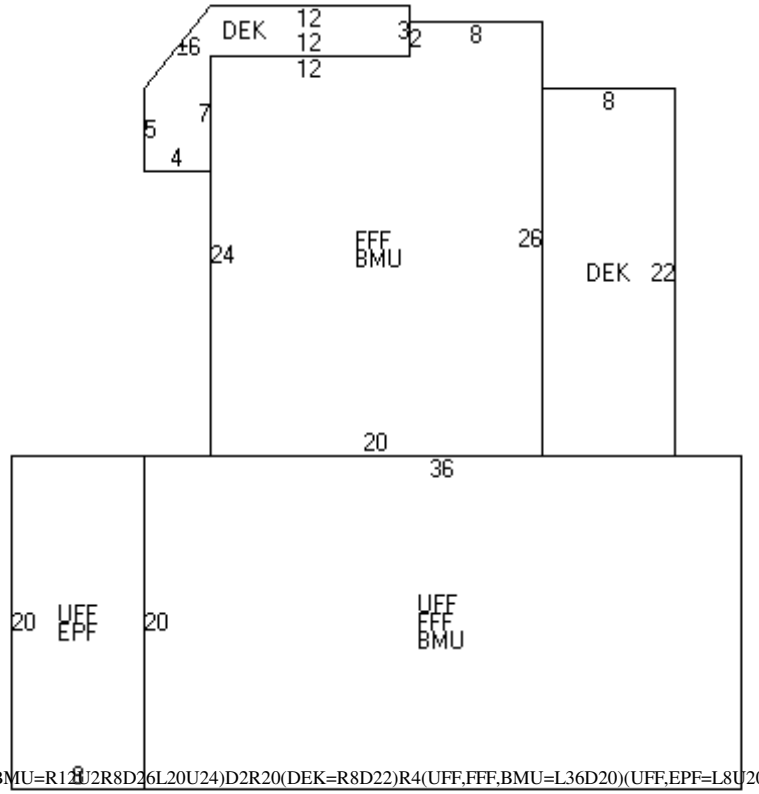

(DEK=R12U3L12[D5L4]D5R4U7)(FFF,BMU=R12U2R8D26L20U24)D2R20(DEK=R8D22)R4(UFF,FFF,BMU=L36D20)(UFF,EPF=L8U20)

BUILDING SUB AREA DETAILS

ID	Description	Area	Adj.	Effect.
DEK	DECK/ENTRANCE	242	0.10	24
FFF	FST FLR FIN	1216	1.00	1216
BMU	BSMNT	1216	0.15	182
UFF	UPPER FLR FIN	880	1.00	880
EPF	ENCLSD PORCH	160	0.70	112
GLA:	**2,208**	**3,714**		**2,414**

2013 BASE YEAR BUILDING VALUATION

Market Cost New:		**$ 168,956**
Year Built:		**1697**
Condition For Age:	GOOD	**36 %**
Physical:		
Functional:		
Economic:		
Temporary:		
Total Depreciation:		**36 %**
Building Value:		**$ 108,100**

OWNER INFORMATION

DS2014 RE, LLC

95 EXETER RD

KINGSTON, NH 03848

SALES HISTORY

Date	Book	Page	Type	Price	Grantor
04/09/2014	5523	1573	Q I	600,000	BROWN, MARC I
03/31/2003	3987	1071	Q I	600,000	BRAGG, WALTER E. & KAR

PICTURE

LISTING HISTORY

03/27/16	KCPU
03/18/15	KCPU
02/20/13	KCPU
06/01/12	KCM
03/22/11	KCPU
04/20/07	JARO
05/14/03	BW X

NOTES

C-17060. YELLOW, MXU AS FLOWER SHOP & ICE CREAM SHOP WITH RESIDENCE. P/U NEW AS ROOF 100% AND 27X20 CARPORT REMOVE JAR 4/07, ADJ SKETCH LABELING, ADD HSF AREA (WHICH IS INSIDE LARGE BARN CONNECTED TO HSE) 100% COMP 3/11KC, NVCHNG 2/13KC, NOH EST NVCHNG 3/15KC, PU COMP NVCHNG 3/16KC

EXTRA FEATURES VALUATION

Feature Type	Units	Lngth x Width	Size Adj	Rate	Cond	Market Value	Notes
BARN-2STRY/LOFT/BSMT	2,470	65 x 38	66	30.00	70	34,234	UFF IN BARN ON SKTCH
OPEN PORCH	240		127	12.50	80	3,048	
BARN	1,320	44 x 30	72	16.20	80	12,317	
OPEN PORCH	60		327	12.50	80	1,962	
CARPORT WOOD FRAME	20	4 x 5	400	12.00	80	768	
LEAN-TO	120	12 x 10	193	3.00	80	556	
LEAN-TO	35	7 x 5	400	3.00	80	336	
SILO-WOOD FRAME	14	14 x 1	400	18.00	80	806	
FIREPLACE 1-1	1		100	3,000.00	100	3,000	
WALKIN COLLER	104	8 x 13	214	120.00	60	16,024	
						73,100	

MUNICIPAL SOFTWARE BY AVITAR

KINGSTON ASSESSING OFFICE

PARCEL TOTAL TAXABLE VALUE

Year	Building	Features	Land
2014	$ 347,000	$ 73,100	$ 120,700
		Parcel Total:	$ 540,800
2015	$ 347,000	$ 73,100	$ 120,700
		Parcel Total:	$ 540,800
2016	**$ 178,000**	**$ 73,100**	**$ 120,700**(c)
		Parcel Total:	**$ 540,800**

(Card Total: $ 371,800)

LAND VALUATION

Zone: SFRAG SFR AGR **Minimum Acreage:** 1.84 **Minimum Frontage:** 200 **Site:** **Driveway:** **Road:**

Land Type	Units	Base Rate	NC	Adj	Site	Road	DWay	Topography	Cond	Ad Valorem	SPI	R	Tax Value	Notes
COM/IND	1.840 ac	80,000	E	100	100	100	100		150	120,000	0	N	120,000	USE
COM/IND	0.370 ac	x 2,000	X	100					100	700	0	N	700	
	2.210 ac									120,700			**120,700**	

PICTURE

OWNER

DS2014 RE, LLC

95 EXETER RD

KINGSTON, NH 03848

TAXABLE DISTRICTS

District	Percentage

PERMITS

Date	Permit ID	Permit Type	Notes
04/13/15	R36-1-10	ALTERATION	HANDICAPPED RAMP
12/01/14	R36-1-10	ELECTRIC PERMIT	SOLAR PANEL DISPLAY - 3
09/22/14	R36-1-10	ELECTRIC PERMIT	WIRE KITCHEN/BATH REM
09/19/14	R36-1-10	REPAIR	REMODEL KITCHEN; CREA
07/18/12	CA20121089	SEPTIC	APPROVAL FOR OPERATIC
06/05/12	CA20121089	SEPTIC	APPROVAL FOR CONSTRU(
05/03/10	R36-1-10	ADDITION	3 BEDROOM ADDITION WI

BUILDING DETAILS

Model: **1.50 STORY FRAME CAPE**
Roof: **GABLE HIP/ASPHALT**
Ext: **CLAP BOARD**
Int: **PLASTERED/DRYWALL**
Floor: **PINE/SOFT WD/CARPET**
Heat: **OIL/HOT WATER**
Bedrooms: **3** Baths: **2.0** Fixtures:
Extra Kitchens: Fireplaces:
A/C: **No** Generators:
Quality: **A0 AVG**
Com. Wall:
Size Adj: **0.9084** Base Rate: **CIJ 95.00**
Bldg. Rate: **0.8635**
Sq. Foot Cost: **$ 82.03**

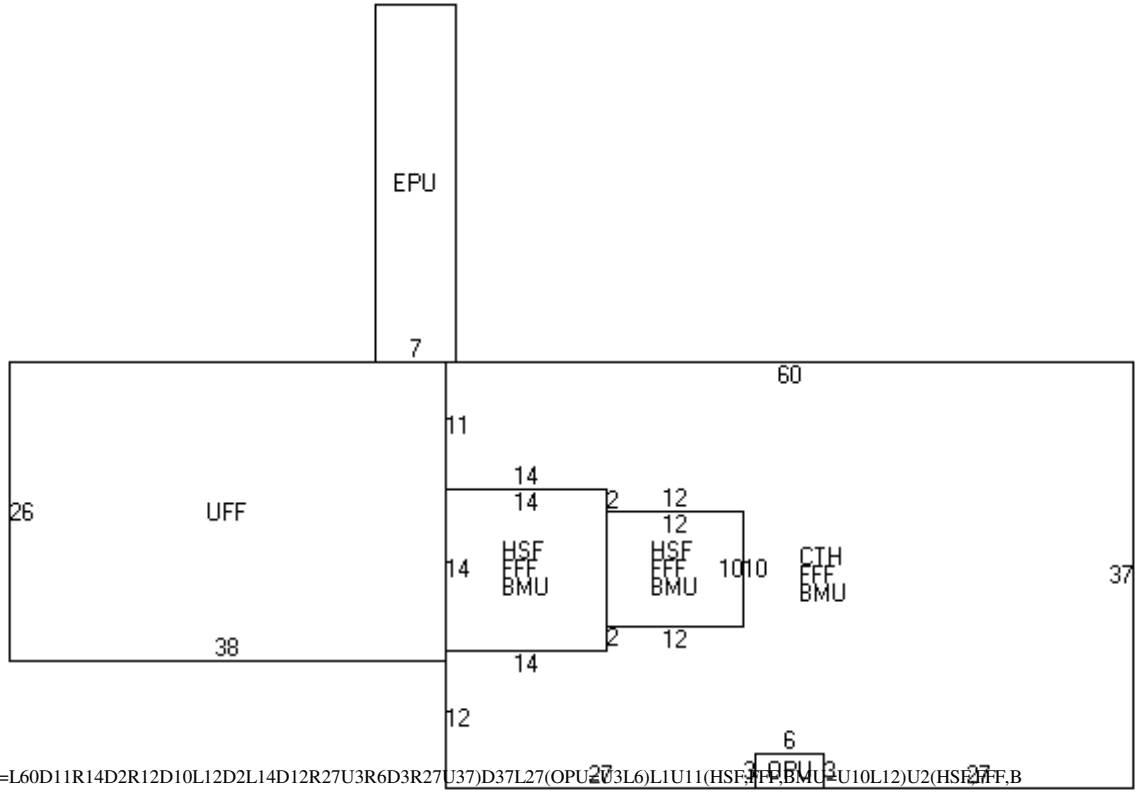

(CTH,FFF,BMU=L60D11R14D2R12D10L12D2L14D12R27U3R6D3R27U37)D37L27(OPU=L3L6)L1U11(HSF,FFF,BMU=U10L12)U2(HSF,FFF,B
MU=L14D14)D1(UFF=L38U26)R39(EPU=L7U31)

BUILDING SUB AREA DETAILS

ID	Description	Area	Adj.	Effect.
EPU	ENCL PORCH	217	0.35	76
CTH	CATHEDRAL	1886	0.10	189
FFF	FST FLR FIN	2202	1.00	2202
BMU	BSMNT	2202	0.15	330
OPU	OPEN PORCH	18	0.15	3
HSF	1/2 STRY FIN	316	0.50	158
UFF	UPPER FLR FIN	988	1.00	988
GLA:	**3,348**	**7,829**		**3,946**

2013 BASE YEAR BUILDING VALUATION

Market Cost New:		**$ 323,690**
Year Built:		**1800**
Condition For Age:	AVERAGE	**45 %**
Physical:		
Functional:		
Economic:		
Temporary:		
Total Depreciation:		**45 %**
Building Value:		**$ 178,000**

OWNER INFORMATION

DS2014 RE, LLC

95 EXETER RD

KINGSTON, NH 03848

SALES HISTORY

Date	Book	Page	Type	Price	Grantor

PICTURE

LISTING HISTORY

05/14/03 BW

NOTES

YELLOW, MXU IS FLOWER SHOP & ICE CREAM SHOP

EXTRA FEATURES VALUATION

Feature Type	Units	Lngth x Width	Size Adj	Rate	Cond	Market Value	Notes

MUNICIPAL SOFTWARE BY AVITAR

KINGSTON ASSESSING OFFICE

PARCEL TOTAL TAXABLE VALUE

Year	Building	Features	Land
2016	$ 169,000	$ 0	$ 0(c)

Parcel Total: $ 540,800

(Card Total: $ 169,000)

LAND VALUATION

Zone: **Minimum Acreage:** **Minimum Frontage:** **Site:** **Driveway:** **Road:**

Land Type	Units	Base Rate	NC	Adj	Site	Road	DWay	Topography	Cond	Ad Valorem	SPI	R	Tax Value	Notes
COM/IND	0 ac													

PICTURE

OWNER

DS2014 RE, LLC

95 EXETER RD

KINGSTON, NH 03848

TAXABLE DISTRICTS

District	Percentage

PERMITS

Date	Permit ID	Permit Type	Notes

BUILDING DETAILS

Model: **1.00 STORY FRAME STORE**
Roof: **GABLE HIP/ASPHALT**
Ext: **BELOW AVG**
Int: **DRYWALL**
Floor: **PINE/SOFT WD**
Heat: **WOOD/COAL/NONE**
Bedrooms: Baths: **1.0** Fixtures:
Extra Kitchens: Fireplaces:
A/C: **No** Generators:
Quality: **A0 AVG**
Com. Wall: **WOOD, 12 FT.** **1.0000**
Size Adj: **0.9092** Base Rate: **CIS 77.00**
Bldg. Rate: **0.6819**
Sq. Foot Cost: **$ 52.51**

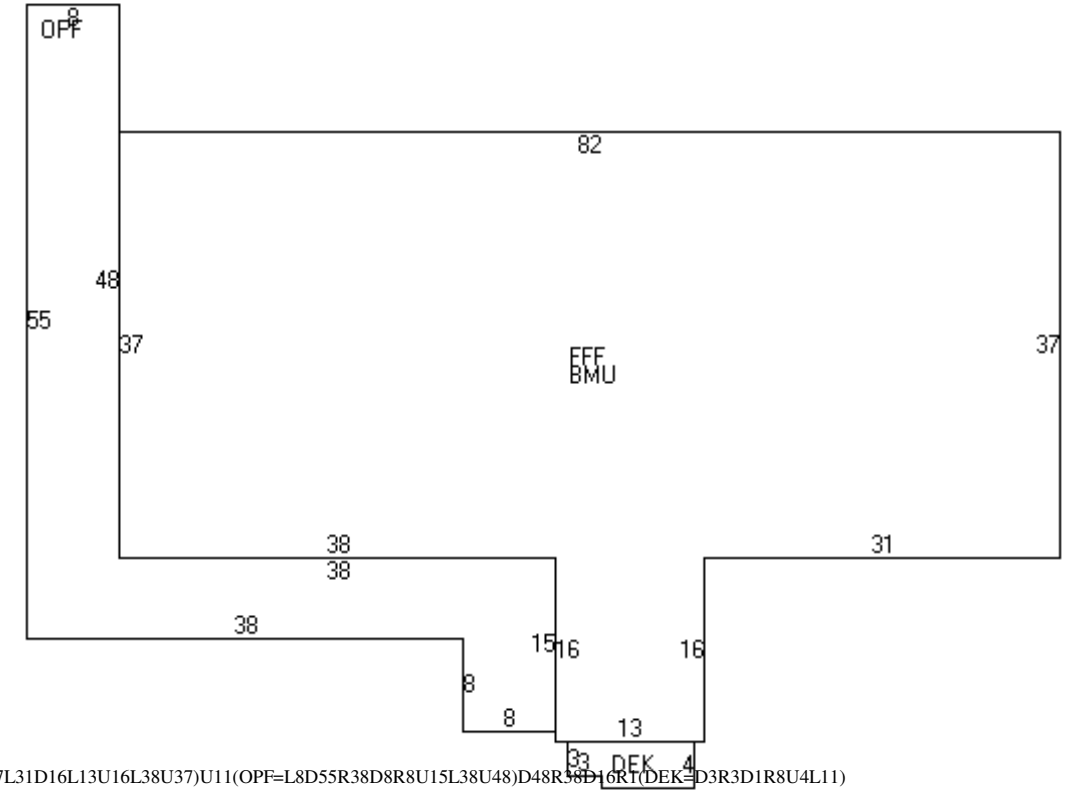

(FFF,BMU=R82D37L31D16L13U16L38U37)U11(OPF=L8D55R38D8R8U15L38U48)D48R38D16RT(DEK=D3R3D1R8U4L11)

BUILDING SUB AREA DETAILS

ID	Description	Area	Adj.	Effect.
FFF	FST FLR FIN	3242	1.00	3242
BMU	BSMNT	3242	0.15	486
OPF	OPEN PORCH FIN	770	0.25	193
DEK	DECK/ENTRANCE	41	0.10	4
GLA:	**3,242**	**7,295**		**3,925**

2013 BASE YEAR BUILDING VALUATION

Market Cost New:		**$ 206,102**
Year Built:		**1980**
Condition For Age:	AVERAGE	**18 %**
Physical:		
Functional:		
Economic:		
Temporary:		
Total Depreciation:		**18 %**
Building Value:		**$ 169,000**

OWNER INFORMATION

TESSIER, ROBERT A. JR
TESSIER, ANNIE V
89 EXETER RD

KINGSTON, NH 03848

SALES HISTORY

Date	Book	Page	Type	Price	Grantor

PICTURE

LISTING HISTORY

06/27/12 KCML
04/20/04 SH O
05/14/03 BW O

NOTES

YELLOW WAITING FOR ELEC., BUT LIVING IN AREA. COMPLETE EXCEPT DRYWALL IN GARAGE. CORRECT SKETCH, REMOVE SHED 6/12KC

EXTRA FEATURES VALUATION

Feature Type	Units	Lngth x Width	Size Adj	Rate	Cond	Market Value	Notes

MUNICIPAL SOFTWARE BY AVITAR

KINGSTON ASSESSING OFFICE

PARCEL TOTAL TAXABLE VALUE

Year	Building	Features	Land
2014	$ 125,200	$ 0	$ 80,600
		Parcel Total:	$ 205,800
2015	$ 125,200	$ 0	$ 80,600
		Parcel Total:	$ 205,800
2016	**$ 125,200**	**$ 0**	**$ 80,600**
		Parcel Total:	**$ 205,800**

LAND VALUATION

Zone: SFRAG SFR AGR **Minimum Acreage:** 1.84 **Minimum Frontage:** 200 **Site:** **Driveway:** **Road:**

Land Type	Units	Base Rate	NC	Adj	Site	Road	DWay	Topography	Cond	Ad Valorem	SPI	R	Tax Value	Notes
1F RES	1.840 ac	80,000	E	100	100	100	100		100	80,000	0	N	80,000	
1F RES	0.300 ac	x 2,000	X	100					100	600	0	N	600	
	2.140 ac									80,600			**80,600**	

Map: 000R36 Lot: 000001 Sub: 000013 Card: 1 of 1 89 EXETER RD KINGSTON Printed: 07/22/2016

PICTURE

OWNER

TESSIER, ROBERT A. JR
TESSIER, ANNIE V
89 EXETER RD

KINGSTON, NH 03848

TAXABLE DISTRICTS

District	Percentage

PERMITS

Date	Permit ID	Permit Type	Notes
07/01/03	R36-1-13	BUILDING	22 X 24 ADDITION

BUILDING DETAILS

Model: **1.00 STORY FRAME RANCH**
Roof: **GABLE HIP/ASPHALT**
Ext: **CLAP BOARD**
Int: **DRYWALL**
Floor: **HARDWOOD/CARPET**
Heat: **OIL/HOT WATER**
Bedrooms: **3** Baths: **2.0** Fixtures:
Extra Kitchens: Fireplaces:
A/C: **No** Generators:
Quality: **A0 AVG**
Com. Wall:
Size Adj: **1.0013** Base Rate: **RSA 80.00**
Bldg. Rate: **0.9713**
Sq. Foot Cost: **$ 77.70**

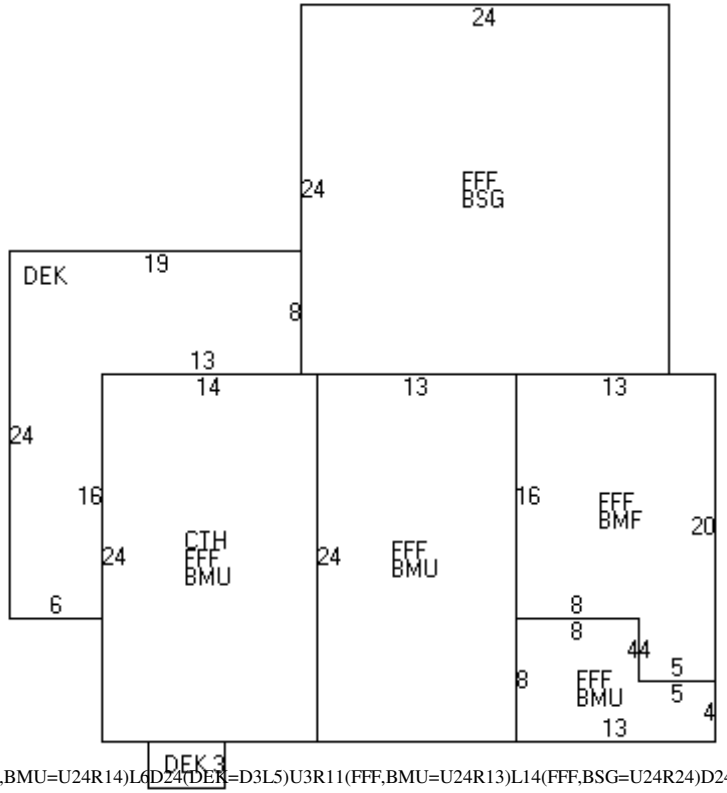

(DEK=L6U24R19D8L13D16)D8(CTH,FFF,BMU=U24R14)L6D24(DEK=D3L5)U3R11(FFF,BMU=U24R13)L14(FFF,BSG=U24R24)D24L10(FFF,BMF=D16R8D4R5U20L13)D16(FFF,BMU=D8R13U4L5U4L8)

BUILDING SUB AREA DETAILS

ID	Description	Area	Adj.	Effect.
DEK	DECK/ENTRANCE	263	0.10	26
CTH	CATHEDRAL	336	0.10	34
FFF	FST FLR FIN	1536	1.00	1536
BMU	BSMNT	732	0.15	110
BSG	BSMT GAR	576	0.25	144
BMF	BSMNT FINISHED	228	0.30	68
GLA:	**1,536**	**3,671**		**1,918**

2013 BASE YEAR BUILDING VALUATION

Market Cost New:		**$ 149,029**
Year Built:		**1983**
Condition For Age:	AVERAGE	**14 %**
Physical:		
Functional:	BMF	**2 %**
Economic:		
Temporary:		
Total Depreciation:		**16 %**
Building Value:		**$ 125,200**

OWNER INFORMATION

DESCHENES J R HEIRS& ROB. TR
JOS & ROBERTA DESHENES LIV TR
75 EXETER RD

KINGSTON, NH 03848

SALES HISTORY

Date	Book	Page	Type	Price	Grantor

PICTURE

LISTING HISTORY

06/26/12 KCM
05/15/03 BW O

NOTES

WHITE, CORRECT DEK & EXTRA FEATURES 6/12KC

EXTRA FEATURES VALUATION

Feature Type	Units	Lngth x Width	Size Adj	Rate	Cond	Market Value	Notes
FIREPLACE 2-1	1		100	4,000.00	100	4,000	
1.75 S GAR	672	28 x 24	84	38.50	80	17,386	
CARPORT WOOD FRAME	384	24 x 16	102	12.00	80	3,760	
BARN /LOFT	432	24 x 18	97	18.00	80	6,034	
POOL ABOVE GROUND	200		140	13.00	100	3,640	
						34,800	

MUNICIPAL SOFTWARE BY AVITAR

KINGSTON ASSESSING OFFICE

PARCEL TOTAL TAXABLE VALUE

Year	Building	Features	Land
2014	$ 138,000	$ 34,800	$ 93,300
		Parcel Total:	$ 266,100
2015	$ 138,000	$ 34,800	$ 93,300
		Parcel Total:	$ 266,100
2016	**$ 138,000**	**$ 34,800**	**$ 93,300**
		Parcel Total:	**$ 266,100**

LAND VALUATION

Zone: SFRAG SFR AGR **Minimum Acreage:** 1.84 **Minimum Frontage:** 200 **Site:** **Driveway:** **Road:**

Land Type	Units	Base Rate	NC	Adj	Site	Road	DWay	Topography	Cond	Ad Valorem	SPI	R	Tax Value	Notes
1F RES	1.840 ac	80,000	E	100	100	100	100		100	80,000	0	N	80,000	
1F RES	6.910 ac	x 2,000	X	96					100	13,300	0	N	13,300	
	8.750 ac									93,300			**93,300**	

Map: 000R36 **Lot: 000002** **Sub: 000001** **Card: 1 of 1** **75 EXETER RD** **KINGSTON** **Printed: 07/22/2016**

PICTURE

OWNER

DESCHENES J R HEIRS& ROB. TR
JOS & ROBERTA DESHENES LIV TR
75 EXETER RD

KINGSTON, NH 03848

TAXABLE DISTRICTS

District	Percentage

PERMITS

Date	Permit ID	Permit Type	Notes

BUILDING DETAILS

Model: **2.00 STORY FRAME FARM HOUSE**
Roof: **GABLE HIP/ASPHALT**
Ext: **CLAP BOARD**
Int: **PLASTERED/DRYWALL**
Floor: **PINE/SOFT WD**
Heat: **OIL/HOT WATER**
Bedrooms: **3** Baths: **1.0** Fixtures:
Extra Kitchens: Fireplaces:
A/C: **No** Generators:
Quality: **A1 AVG+10**
Com. Wall:
Size Adj: **0.9297** Base Rate: **RSA 80.00**
Bldg. Rate: **0.9321**
Sq. Foot Cost: **$ 74.56**

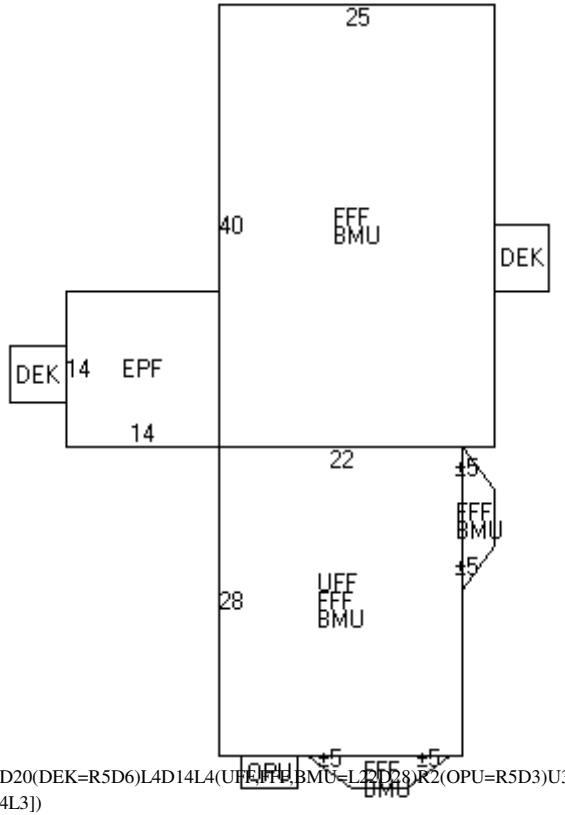

(DEK=U5R5)U5(EPF=D14R14)(FFF,BMU=U40R25)D20(DEK=R5D6)L4D14L4(UFF,FFF,BMU=L22D28)R2(OPU=R5D3)U3R1(FFF,BMU=[D3R4]R5[R4U3]L13)R14U15(FFF,BMU=U13[R3D4]D5[D4L3])

BUILDING SUB AREA DETAILS

ID	Description	Area	Adj.	Effect.
DEK	DECK/ENTRANCE	55	0.10	6
EPF	ENCLSD PORCH	196	0.70	137
FFF	FST FLR FIN	1670	1.00	1670
BMU	BSMNT	1670	0.15	251
UFF	UPPER FLR FIN	616	1.00	616
OPU	OPEN PORCH	15	0.15	2
GLA:	**2,423**	**4,222**		**2,682**

2013 BASE YEAR BUILDING VALUATION

Market Cost New:		**$ 199,970**
Year Built:		**1861**
Condition For Age:	AVERAGE	**31 %**
Physical:		
Functional:		
Economic:		
Temporary:		
Total Depreciation:		**31 %**
Building Value:		**$ 138,000**

OWNER INFORMATION

DESCHENES, DAVID A
DESCHENES, BRENDA C
79 EXETER RD

KINGSTON, NH 03848-3112

SALES HISTORY

Date	Book	Page	Type	Price	Grantor

PICTURE

LISTING HISTORY

06/26/12 KCM
05/15/03 BW O

NOTES

BLUE, SHARED DRIVE WAY, CHNG SIDING-CORRECT SKETCH, & ADD DEK 6/12KC

EXTRA FEATURES VALUATION

Feature Type	Units	Lngth x Width	Size Adj	Rate	Cond	Market Value	Notes
FIREPLACE 1-1	1		100	3,000.00	100	3,000	
						3,000	

MUNICIPAL SOFTWARE BY AVITAR

KINGSTON ASSESSING OFFICE

PARCEL TOTAL TAXABLE VALUE

Year	Building	Features	Land
2014	$ 223,900	$ 3,000	$ 90,400
		Parcel Total:	$ 317,300
2015	$ 223,900	$ 3,000	$ 90,400
		Parcel Total:	$ 317,300
2016	**$ 223,900**	**$ 3,000**	**$ 90,400**
		Parcel Total:	**$ 317,300**

LAND VALUATION

Zone: SFRAG SFR AGR **Minimum Acreage:** 1.84 **Minimum Frontage:** 200 **Site:** **Driveway:** **Road:**

Land Type	Units	Base Rate	NC	Adj	Site	Road	DWay	Topography	Cond	Ad Valorem	SPI	R	Tax Value	Notes
1F RES	1.840 ac	80,000	E	100	100	100	100		100	80,000	0	N	80,000	
1F RES	5.340 ac	x 2,000	X	97					100	10,400	0	N	10,400	
	7.180 ac									90,400			**90,400**	

Map: 000R36 **Lot: 000002** **Sub: 000002** **Card: 1 of 1** **79 EXETER RD** **KINGSTON** **Printed: 07/22/2016**

PICTURE

OWNER

DESCHENES, DAVID A
DESCHENES, BRENDA C
79 EXETER RD

KINGSTON, NH 03848-3112

TAXABLE DISTRICTS

District	Percentage

PERMITS

Date	Permit ID	Permit Type	Notes

BUILDING DETAILS

Model: **1.75 STORY FRAME CAPE**
Roof: **GABLE HIP/ASPHALT**
Ext: **CEDAR/REDWD**
Int: **DRYWALL**
Floor: **HARDWOOD**
Heat: **OIL/HOT WATER**
Bedrooms: **3** Baths: **1.5** Fixtures:
Extra Kitchens: Fireplaces:
A/C: **No** Generators:
Quality: **A1 AVG+10**
Com. Wall:
Size Adj: **0.8984** Base Rate: **RSA 80.00**
Bldg. Rate: **0.9686**
Sq. Foot Cost: **$ 77.49**

BUILDING SUB AREA DETAILS

ID	Description	Area	Adj.	Effect.
TQF	3/4 STRY FIN	1704	0.75	1278
GAR	GARAGE	696	0.45	313
HSF	1/2 STRY FIN	300	0.50	150
FFF	FST FLR FIN	1308	1.00	1308
OPF	OPEN PORCH FIN	60	0.25	15
DEK	DECK/ENTRANCE	324	0.10	32
BMU	BSMNT	1008	0.15	151
GLA:	**2,736**	**5,400**		**3,247**

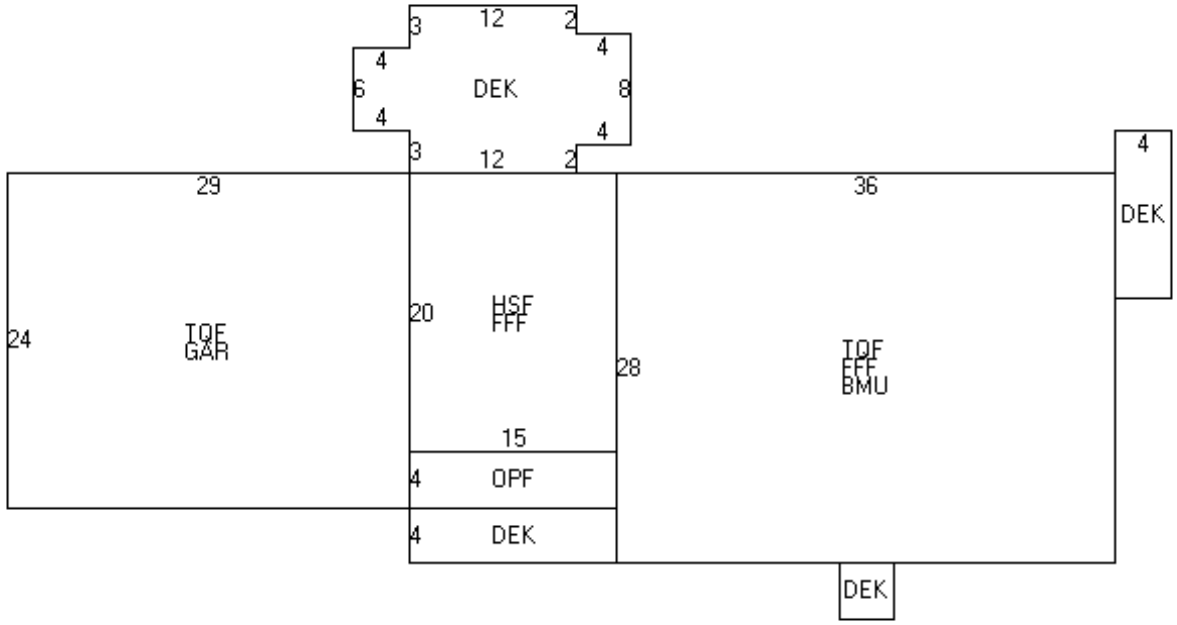

(TQF,GAR=U24R29)(HSF,FFF=D20R15)(OPF=L15D4)(DEK=D4R15)(TQF,FFF,BMU=U28R36)U3(DEK=R4D12)L4D19L16(DEK=D4L4)L19U3
2(DEK=U2R4U8L4U2L12D3L4D6R4D3R12)

2013 BASE YEAR BUILDING VALUATION

Market Cost New:		**$ 251,610**
Year Built:		**1992**
Condition For Age:	AVERAGE	**11 %**
Physical:		
Functional:		
Economic:		
Temporary:		
Total Depreciation:		**11 %**
Building Value:		**$ 223,900**

OWNER INFORMATION

DESCHENES, BRIAN J
DESCHENES, COURTNEY L
81 EXETER RD

KINGSTON, NH 03848-3112

SALES HISTORY

Date	Book	Page	Type	Price	Grantor

PICTURE

LISTING HISTORY

06/26/12 KCML
05/19/03 BW O
05/13/03 BW X

NOTES

BROWN, SHARED DRIVE WAY, CORRECT LABELING & SIDING 6/12KC

EXTRA FEATURES VALUATION

Feature Type	Units	Lngth x Width	Size Adj	Rate	Cond	Market Value	Notes
FIREPLACE 1-1	1		100	3,000.00	100	3,000	
						3,000	

MUNICIPAL SOFTWARE BY AVITAR

KINGSTON ASSESSING OFFICE

PARCEL TOTAL TAXABLE VALUE

Year	Building	Features	Land
2014	$ 192,200	$ 3,000	$ 84,800
		Parcel Total:	$ 280,000
2015	$ 192,200	$ 3,000	$ 84,800
		Parcel Total:	$ 280,000
2016	**$ 192,200**	**$ 3,000**	**$ 84,800**
		Parcel Total:	**$ 280,000**

LAND VALUATION

Zone: SFRAG SFR AGR **Minimum Acreage:** 1.84 **Minimum Frontage:** 200 **Site:** **Driveway:** **Road:**

Land Type	Units	Base Rate	NC	Adj	Site	Road	DWay	Topography	Cond	Ad Valorem	SPI	R	Tax Value	Notes
1F RES	1.840 ac	80,000	E	100	100	100	100		100	80,000	0	N	80,000	
1F RES	2.420 ac	x 2,000	X	100					100	4,800	0	N	4,800	
	4.260 ac									84,800			**84,800**	

Map: 000R36 **Lot: 000002** **Sub: 000003** **Card: 1 of 1** **81 EXETER RD** **KINGSTON** **Printed: 07/22/2016**

PICTURE

OWNER

DESCHENES, BRIAN J
DESCHENES, COURTNEY L
81 EXETER RD

KINGSTON, NH 03848-3112

TAXABLE DISTRICTS

District	Percentage

PERMITS

Date	Permit ID	Permit Type	Notes

BUILDING DETAILS

Model: **2.00 STORY FRAME CONVENTION**
Roof: **GABLE HIP/ASPHALT**
Ext: **CEDAR/REDWD**
Int: **DRYWALL**
Floor: **CARPET**
Heat: **OIL/HOT WATER**
Bedrooms: **3** Baths: **2.0** Fixtures:
Extra Kitchens: Fireplaces:
A/C: **No** Generators:
Quality: **A1 AVG+10**
Com. Wall:
Size Adj: **0.9263** Base Rate: **RSA 80.00**
Bldg. Rate: **0.9986**
Sq. Foot Cost: **$ 79.88**

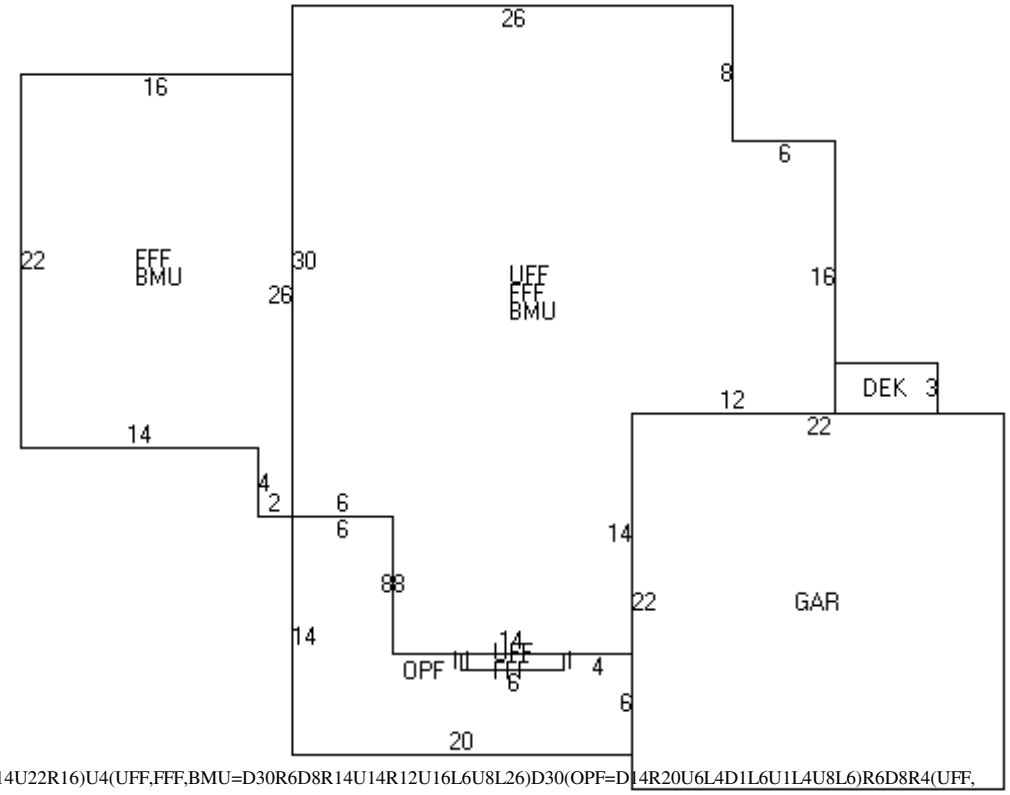

(FFF,BMU=D26L2U4L14U22R16)U4(UFF,FFF,BMU=D30R6D8R14U14R12U16L6U8L26)D30(OPF=D14R20U6L4D1L6U1L4U8L6)R6D8R4(UFF,FFF=D1R6)U1R4D8(GAR=U22R22)L4(DEK=U3L6)

BUILDING SUB AREA DETAILS

ID	Description	Area	Adj.	Effect.
FFF	FST FLR FIN	1318	1.00	1318
BMU	BSMNT	1312	0.15	197
UFF	UPPER FLR FIN	958	1.00	958
OPF	OPEN PORCH FIN	162	0.25	41
GAR	GARAGE	484	0.45	218
DEK	DECK/ENTRANCE	18	0.10	2
GLA:	**2,276**	**4,252**		**2,734**

2013 BASE YEAR BUILDING VALUATION

Market Cost New:		**$ 218,392**
Year Built:		**1990**
Condition For Age:	AVERAGE	**12 %**
Physical:		
Functional:		
Economic:		
Temporary:		
Total Depreciation:		**12 %**
Building Value:		**$ 192,200**

OWNER INFORMATION

KEMP, DONALD A.
KEMP, NORMA L.
73 EXETER ROAD

KINGSTON, NH 03848

SALES HISTORY

Date	Book	Page	Type	Price	Grantor

PICTURE

LISTING HISTORY

06/26/12 KCML
04/15/08 KCO
04/20/07 JARX
05/15/03 BW O

NOTES

GREY - (3/05 ADJ A PER LLA RW CONSERVATION EASEMENT) NO START CK 08 JAR 4/07, RELOCATION & GAR ADDITION 100% COMP 4/08KC, CORRECT FLRING, & STORY HEIGHT 6/12KC

EXTRA FEATURES VALUATION

Feature Type	Units	Lngth x Width	Size Adj	Rate	Cond	Market Value	Notes
FIREPLACE 1-1	1		100	3,000.00	100	3,000	
GARAGE	390	15 x 26	101	30.00	60	7,090	
SHED-WOOD	912	48 x 19	78	10.00	70	4,980	
BARN /LOFT	1,980	33 x 60	68	18.00	70	16,965	
CARPORT WOOD FRAME	200	10 x 20	140	12.00	60	2,016	
DECK DETACHED	21	7 x 3	400	10.00	70	588	
						34,600	

MUNICIPAL SOFTWARE BY AVITAR.

KINGSTON ASSESSING OFFICE

PARCEL TOTAL TAXABLE VALUE

Year	Building	Features	Land
2014	$ 128,600	$ 34,600	$ 86,359
		Parcel Total:	$ 249,559
2015	$ 128,600	$ 34,600	$ 85,861
		Parcel Total:	$ 249,061
2016	**$ 128,600**	**$ 34,600**	**$ 85,861**
		Parcel Total:	**$ 249,061**

LAND VALUATION

Zone: SFRAG SFR AGR **Minimum Acreage:** 1.84 **Minimum Frontage:** 200 **Site:** **Driveway:** **Road:**

Land Type	Units	Base Rate	NC	Adj	Site	Road	DWay	Topography	Cond	Ad Valorem	SPI	R	Tax Value	Notes
1F RES	1.840 ac	80,000	E	100	100	100	100		100	80,000	0	N	80,000	
1F RES	0.160 ac	x 2,000	X	93					100	300	0	N	300	
FARM LAND	13.950 ac	x 2,000	X	93					100	25,900	100	N	5,561	
	15.950 ac									106,200			**85,861**	

PICTURE

OWNER

KEMP, DONALD A.
KEMP, NORMA L.
73 EXETER ROAD

KINGSTON, NH 03848

TAXABLE DISTRICTS

District	Percentage

PERMITS

Date	Permit ID	Permit Type	Notes
04/18/06	R36-3	ALTERATION	RELOCATING GARAGE AN

BUILDING DETAILS

Model: **1.00 STORY FRAME CONVENTION**
Roof: **GABLE HIP/ASPHALT**
Ext: **WOOD SHINGLE**
Int: **DRYWALL/CUSTOM WOOD**
Floor: **HARDWOOD**
Heat: **OIL/FA DUCTED**
Bedrooms: **3** Baths: **2.0** Fixtures:
Extra Kitchens: Fireplaces:
A/C: **No** Generators:
Quality: **A0 AVG**
Com. Wall:
Size Adj: **0.9760** Base Rate: **RSA 80.00**
Bldg. Rate: **0.9662**
Sq. Foot Cost: **$ 77.30**

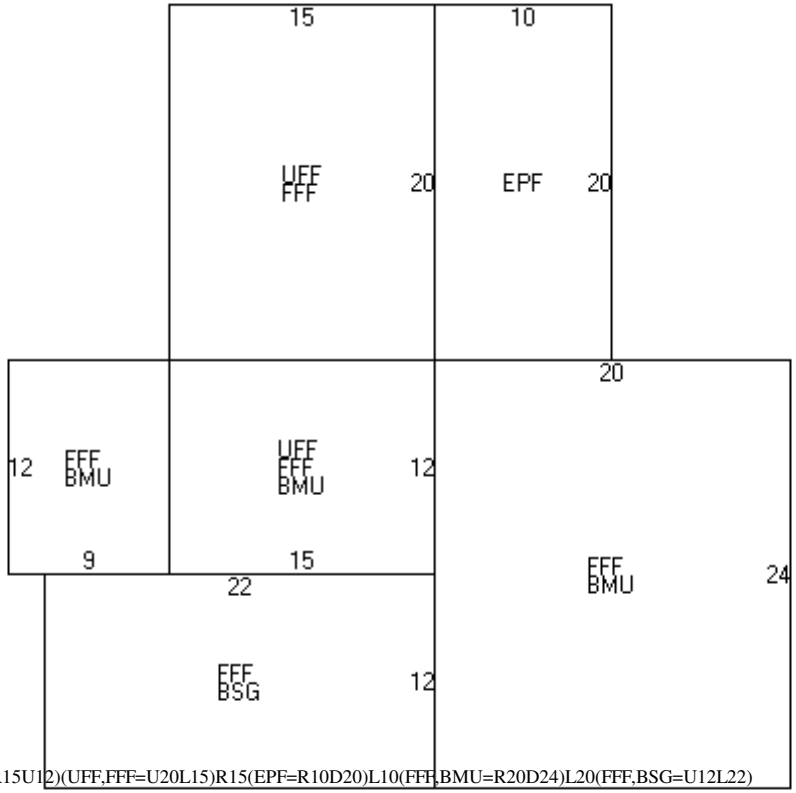

(FFF,BMU=D12R9)(UFF,FFF,BMU=R15U12)(UFF,FFF=U20L15)R15(EPF=R10D20)L10(FFF,BMU=R20D24)L20(FFF,BSG=U12L22)

BUILDING SUB AREA DETAILS

ID	Description	Area	Adj.	Effect.
FFF	FST FLR FIN	1332	1.00	1332
BMU	BSMNT	768	0.15	115
UFF	UPPER FLR FIN	480	1.00	480
EPF	ENCLSD PORCH	200	0.70	140
BSG	BSMT GAR	264	0.25	66
GLA:	**1,952**	**3,044**		**2,133**

2013 BASE YEAR BUILDING VALUATION

Market Cost New:		**$ 164,881**
Year Built:		**1957**
Condition For Age:	FAIR	**22 %**
Physical:		
Functional:		
Economic:		
Temporary:		
Total Depreciation:		**22 %**
Building Value:		**$ 128,600**

OWNER INFORMATION

COAKLEY, MELISSA
COAKLEY, BRIAN
71 EXETER RD.

KINGSTON, NH 03848

SALES HISTORY

Date	Book	Page	Type	Price	Grantor
02/24/2006	4622	422	U I 14	300,000	FREDETTE
09/01/2005	4541	2476	Q I	182,000	KEMP

PICTURE

LISTING HISTORY

03/10/14	KCPU
06/26/12	KCML
03/30/06	JARX
03/04/05	RW
04/20/04	SH X
05/15/03	BW O

NOTES

GREY, SILL ROT THROUGHOUT, FOUNDATION FAILING, NOT INSULATED. RECHECK 2004- FOR DEMOLITION OF CARPORT ON REAR OF BUILDING. 3/05 ADJ AC PER LLA RW. 03/06 NOH PU RENOV 100% BACK OF HSE REMOV JAR, ADD PLASTER WALLS, ADJ FPL COND (USABILITY) 6/12KC, SHED COMP 3/14KC

EXTRA FEATURES VALUATION

Feature Type	Units	Lngth x Width	Size Adj	Rate	Cond	Market Value	Notes
FIREPLACE 2-1	1		100	4,000.00	50	2,000	1/2 UNUSABLE
SHED-WOOD	240	12 x 20	127	10.00	100	3,048	
						5,000	

MUNICIPAL SOFTWARE BY AVITAR

KINGSTON ASSESSING OFFICE

PARCEL TOTAL TAXABLE VALUE

Year	Building	Features	Land
2014	$ 123,000	$ 5,000	$ 80,300
		Parcel Total:	$ 208,300
2015	$ 123,000	$ 5,000	$ 80,300
		Parcel Total:	$ 208,300
2016	**$ 123,000**	**$ 5,000**	**$ 80,300**
		Parcel Total:	**$ 208,300**

LAND VALUATION

Zone: SFRAG SFR AGR **Minimum Acreage:** 1.84 **Minimum Frontage:** 200 **Site:** **Driveway:** **Road:**

Land Type	Units	Base Rate	NC	Adj	Site	Road	DWay	Topography	Cond	Ad Valorem	SPI	R	Tax Value	Notes
1F RES	1.840 ac	80,000	E	100	100	100	100		100	80,000	0	N	80,000	
1F RES	0.160 ac	x 2,000	X	100					100	300	0	N	300	
	2.000 ac									80,300			**80,300**	

Map: 000R36 **Lot: 000004** **Sub: 000000** **Card: 1 of 1** **71 EXETER RD** **KINGSTON** **Printed: 07/22/2016**

PICTURE

OWNER

COAKLEY, MELISSA
COAKLEY, BRIAN
71 EXETER RD.

KINGSTON, NH 03848

TAXABLE DISTRICTS

District	Percentage

PERMITS

Date	Permit ID	Permit Type	Notes
10/10/13	R36-4	ACCESSORY OUTBLD	12 X 20 PRE-BUILT SHED
10/04/05	R36-4	ALTERATION	EXTENSIVE INTERIOR/EXT
06/05/03	R36-4	DEMOLITION	

BUILDING DETAILS

Model: **1.75 STORY FRAME NEWENGLAND**
Roof: **GABLE HIP/ASPHALT**
Ext: **VINYL SIDING**
Int: **DRYWALL/PLASTERED**
Floor: **PINE/SOFT WD/CARPET**
Heat: **OIL/FA DUCTED**
Bedrooms: **4** Baths: **1.0** Fixtures:
Extra Kitchens: Fireplaces:
A/C: **No** Generators:
Quality: **A1 AVG+10**
Com. Wall:
Size Adj: **0.9744** Base Rate: **RSA 80.00**
Bldg. Rate: **1.0081**
Sq. Foot Cost: **$ 80.65**

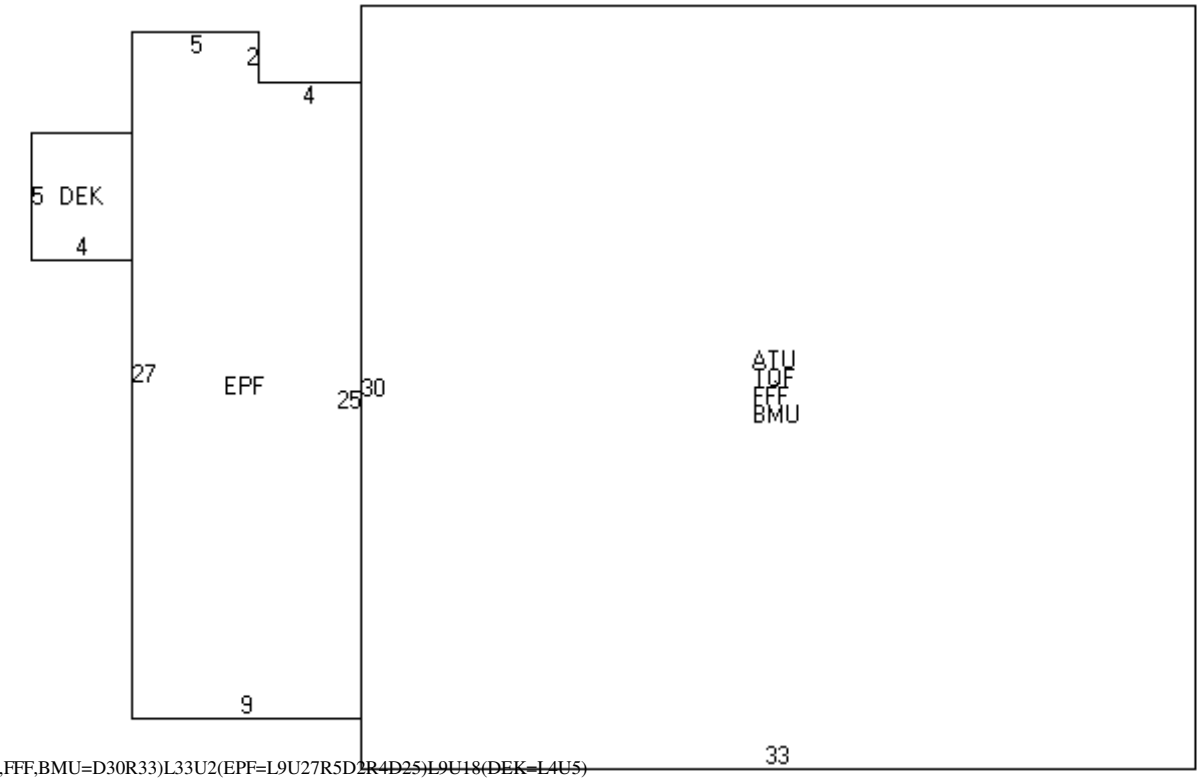

(ATU,TQF,FFF,BMU=D30R33)L33U2(EPF=L9U27R5D2R4D25)L9U18(DEK=L4U5)

BUILDING SUB AREA DETAILS

ID	Description	Area	Adj.	Effect.
ATU	ATTIC	990	0.10	99
TQF	3/4 STRY FIN	990	0.75	743
FFF	FST FLR FIN	990	1.00	990
BMU	BSMNT	990	0.15	149
EPF	ENCLSD PORCH	235	0.70	165
DEK	DECK/ENTRANCE	20	0.10	2
GLA:	**1,898**	**4,215**		**2,148**

2013 BASE YEAR BUILDING VALUATION

Market Cost New:		**$ 173,236**
Year Built:		**1800**
Condition For Age:	GOOD	**29 %**
Physical:		
Functional:		
Economic:		
Temporary:		
Total Depreciation:		**29 %**
Building Value:		**$ 123,000**

OWNER INFORMATION

HENSHAW, LILLIAN A., TR.
LILLIAN A. HENSHAW TRUST
66 EXETER RD

KINGSTON, NH 03848

SALES HISTORY

Date	Book	Page	Type	Price	Grantor
12/18/2006	4745	1780	U V 38		HENSHAW

PICTURE

LISTING HISTORY

06/01/12 KCV
05/15/03 BW

NOTES

VACANT LAND OUTBUILDINGS ONLY, 80 VAC X 1/2 INT = 40 50 TOPO X 1/2 INT = 25 70 TOPO X 1/2 INT = 35, BLDG VALUE = 1/2 INT

EXTRA FEATURES VALUATION

Feature Type	Units	Lngth x Width	Size Adj	Rate	Cond	Market Value	Notes
SHED-WOOD	392	28 x 14	101	10.00	40	1,584	
SHED-WOOD	960	24 x 40	77	10.00	60	4,435	
						6,000	

MUNICIPAL SOFTWARE BY AVITAR

KINGSTON ASSESSING OFFICE

PARCEL TOTAL TAXABLE VALUE

Year	Building	Features	Land
2014	$ 0	$ 6,000	$ 485
		Parcel Total:	$ 6,485
2015	$ 0	$ 6,000	$ 443
		Parcel Total:	$ 6,443
2016	**$ 0**	**$ 6,000**	**$ 443**
		Parcel Total:	**$ 6,443**

LAND VALUATION

Zone: SFRAG SFR AGR **Minimum Acreage:** 1.84 **Minimum Frontage:** 200 **Site:** **Driveway:** **Road:**

Land Type	Units	Base Rate	NC	Adj	Site	Road	DWay	Topography	Cond	Ad Valorem	SPI	R	Tax Value	Notes
UNMNGD HARDWD	1.840 ac	80,000	E	100	100	100	100		25	20,000	100	N	105	TOPO 1/2 INT
UNMNGD HARDWD	1,000.000 ff	x 100	E	100					35	35,000	0	N	0	TOPO 1/2 INT
UNPRODUCTIVE	2.750 ac	x 2,000	X	95					100	5,200	100	N	46	
UNMNGD HARDWD	5.110 ac	x 2,000	X	95					100	9,700	100	N	292	
	9.700 ac									69,900			**443**	

PICTURE

OWNER

HENSHAW, LILLIAN A., TR.
LILLIAN A. HENSHAW TRUST
66 EXETER RD

KINGSTON, NH 03848

TAXABLE DISTRICTS

District	Percentage

PERMITS

Date	Permit ID	Permit Type	Notes
06/22/16	R36-5	DEMOLITION	DEMOLISH BARN - FALLIN

BUILDING DETAILS

Model:
Roof:
Ext:
Int:
Floor:
Heat:
Bedrooms: Baths: Fixtures:
Extra Kitchens: Fireplaces:
A/C: Generators:
Quality:
Com. Wall:
Stories:
Base Type:

BUILDING SUB AREA DETAILS

2013 BASE YEAR BUILDING VALUATION

Year Built:
Condition For Age: %
Physical:
Functional:
Economic:
Temporary:
%

OWNER INFORMATION

HENSHAW, LILLIAN A., TR.
LILLIAN A. HENSHAW TRUST
66 EXETER RD

KINGSTON, NH 03848

SALES HISTORY

Date	Book	Page	Type	Price	Grantor
12/18/2006	4745	1780	U V 38		HENSHAW

PICTURE

LISTING HISTORY

06/01/12 KCV
05/15/03 BW

NOTES

VACANT LAND BUT HAS SOME OUTBUILDINGS ON LOT, (2 SHEDS ARE FALLING DOWN, N/V), CHANGES MADE @ HEARINGS --- RW LAND COND = VAC 80 X 25 SIZE OUT OF NOT BUILDABE RW

EXTRA FEATURES VALUATION

Feature Type	Units	Lngth x Width	Size Adj	Rate	Cond	Market Value	Notes
BARN-2STRY/LOFT	1,080	60 x 18	75	25.00	15	3,038	
						3,000	

MUNICIPAL SOFTWARE BY AVITAR

KINGSTON ASSESSING OFFICE

PARCEL TOTAL TAXABLE VALUE

Year	Building	Features	Land
2014	$ 0	$ 3,000	$ 18,305
		Parcel Total:	$ 21,305
2015	$ 0	$ 3,000	$ 17,927
		Parcel Total:	$ 20,927
2016	**$ 0**	**$ 3,000**	**$ 17,927**
		Parcel Total:	**$ 20,927**

LAND VALUATION

Zone: SFRAG SFR AGR **Minimum Acreage:** 1.84 **Minimum Frontage:** 200 **Site:** **Driveway:** **Road:**

Land Type	Units	Base Rate	NC	Adj	Site	Road	DWay	Topography	Cond	Ad Valorem	SPI	R	Tax Value	Notes
1F RES	0.250 ac	68,625	E	100	100	100	100		20	13,700	0	N	13,700	VACANT
FARM LAND	11.750 ac	x 2,000	X	89					100	20,900	73	N	3,494	
FARM LAND	800.000 ff	x 100	E	100					100	80,000	0	N	0	
UNMNGD HARDWD	13.750 ac	x 2,000	X	89					100	24,500	80	N	733	
UNMNGD HARDWD	800.000 ff	x 100	X	89					100	71,200	0	N	0	
	25.750 ac									210,300			**17,927**	

PICTURE

OWNER

HENSHAW, LILLIAN A., TR.
LILLIAN A. HENSHAW TRUST
66 EXETER RD

KINGSTON, NH 03848

TAXABLE DISTRICTS

District	Percentage

PERMITS

Date	Permit ID	Permit Type	Notes

BUILDING DETAILS

Model:
Roof:
Ext:
Int:
Floor:
Heat:
Bedrooms: Baths: Fixtures:
Extra Kitchens: Fireplaces:
A/C: Generators:
Quality:
Com. Wall:
Stories:

Base Type:

BUILDING SUB AREA DETAILS

2013 BASE YEAR BUILDING VALUATION

Year Built:
Condition For Age: %
Physical:
Functional:
Economic:
Temporary:

%

OWNER INFORMATION

MICHALEK JR, THEODORE M
MICHALEK, SHERYL A
59 EXETER RD

KINGSTON, NH 03848-3111

SALES HISTORY

Date	Book	Page	Type	Price	Grantor
11/29/2001	3681	1802	Q I	292,000	KATZAN

PICTURE

LISTING HISTORY

06/26/12	KCM
09/15/03	BW O
08/08/03	BW X

NOTES

BLUE, DECK SINCE SALE IN 2001, POSTED PRIVATE PROPERTY, CHNG SIDING 6/12KC

EXTRA FEATURES VALUATION

Feature Type	Units	Lngth x Width	Size Adj	Rate	Cond	Market Value	Notes
FIREPLACE 1-1	1		100	3,000.00	100	3,000	
						3,000	

MUNICIPAL SOFTWARE BY AVITAR

KINGSTON ASSESSING OFFICE

PARCEL TOTAL TAXABLE VALUE

Year	Building	Features	Land
2014	$ 194,200	$ 3,000	$ 91,100
		Parcel Total:	$ 288,300
2015	$ 194,200	$ 3,000	$ 91,100
		Parcel Total:	$ 288,300
2016	**$ 194,200**	**$ 3,000**	**$ 91,100**
		Parcel Total:	**$ 288,300**

LAND VALUATION

Zone: SFRAG SFR AGR **Minimum Acreage:** 1.84 **Minimum Frontage:** 200 **Site:** **Driveway:** **Road:**

Land Type	Units	Base Rate	NC	Adj	Site	Road	DWay	Topography	Cond	Ad Valorem	SPI	R	Tax Value	Notes
1F RES	1.840 ac	80,000	E	100	100	100	100		100	80,000	0	N	80,000	
1F RES	5.760 ac	x 2,000	X	96					100	11,100	0	N	11,100	
	7.600 ac									91,100			**91,100**	

Map: 000R36 **Lot: 000007** **Sub: 000000** **Card: 1 of 1** **59 EXETER RD** **KINGSTON** **Printed: 07/22/2016**

PICTURE

OWNER

MICHALEK JR, THEODORE M
MICHALEK, SHERYL A
59 EXETER RD

KINGSTON, NH 03848-3111

TAXABLE DISTRICTS

District	Percentage

PERMITS

Date	Permit ID	Permit Type	Notes

BUILDING DETAILS

Model: **2.00 STORY FRAME COLONIAL**
Roof: **GABLE HIP/ASPHALT**
Ext: **VINYL SIDING**
Int: **DRYWALL**
Floor: **CARPET**
Heat: **OIL/FA DUCTED**
Bedrooms: **4** Baths: **2.5** Fixtures:
Extra Kitchens: Fireplaces:
A/C: **Yes 100.00 %** Generators:
Quality: **A1 AVG+10**
Com. Wall:
Size Adj: **0.9279** Base Rate: **RSA 80.00**
Bldg. Rate: **1.0303**
Sq. Foot Cost: **$ 82.42**

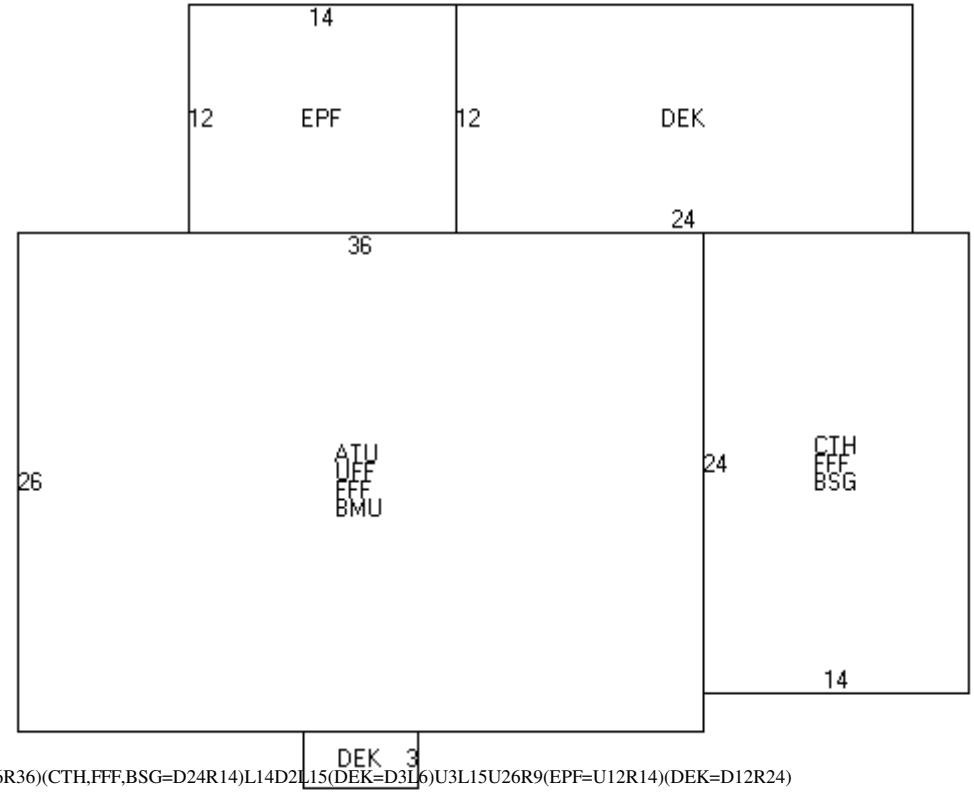

(ATU,UFF,FFF,BMU=U26R36)(CTH,FFF,BSG=D24R14)L14D2L15(DEK=D3L6)U3L15U26R9(EPF=U12R14)(DEK=D12R24)

BUILDING SUB AREA DETAILS

ID	Description	Area	Adj.	Effect.
ATU	ATTIC	936	0.10	94
UFF	UPPER FLR FIN	936	1.00	936
FFF	FST FLR FIN	1272	1.00	1272
BMU	BSMNT	936	0.15	140
CTH	CATHEDRAL	336	0.10	34
BSG	BSMT GAR	336	0.25	84
DEK	DECK/ENTRANCE	306	0.10	31
EPF	ENCLSD PORCH	168	0.70	118
GLA:	**2,326**	**5,226**		**2,709**

2013 BASE YEAR BUILDING VALUATION

Market Cost New:		**$ 223,276**
Year Built:		**1988**
Condition For Age:	AVERAGE	**13 %**
Physical:		
Functional:		
Economic:		
Temporary:		
Total Depreciation:		**13 %**
Building Value:		**$ 194,200**

OWNER INFORMATION

TURNER, KATHERINE M

83 EXETER RD

KINGSTON, NH 03848

SALES HISTORY

Date	Book	Page	Type	Price	Grantor

PICTURE

LISTING HISTORY

03/27/16	KCPU
06/26/12	KCM
03/21/12	KCPU
03/22/11	KCPU
05/15/03	BW X

NOTES

BLUE 9/15/08 REGISTERED BUSINESS VEHICLE - NIBROC HEATING & COOLING, LLC 09/09 CORRECT AGE TO 1980 RW, ADD CENTRAL AIR, CHK 2012 FOR BSMNT OFFICE, ADJ SKETCH LABELING 3/11KC, BMF 100% COM 3/12KC, PU COMP 3/16KC

EXTRA FEATURES VALUATION

Feature Type	Units	Lngth x Width	Size Adj	Rate	Cond	Market Value	Notes
FIREPLACE 1-1	1		100	3,000.00	100	3,000	
						3,000	

MUNICIPAL SOFTWARE BY AVITAR

KINGSTON ASSESSING OFFICE

PARCEL TOTAL TAXABLE VALUE

Year	Building	Features	Land
2014	$ 110,100	$ 3,000	$ 80,700
		Parcel Total:	$ 193,800
2015	$ 110,100	$ 3,000	$ 80,700
		Parcel Total:	$ 193,800
2016	**$ 110,100**	**$ 3,000**	**$ 80,700**
		Parcel Total:	**$ 193,800**

LAND VALUATION

Zone: SFRAG SFR AGR **Minimum Acreage:** 1.84 **Minimum Frontage:** 200 **Site:** **Driveway:** **Road:**

Land Type	Units	Base Rate	NC	Adj	Site	Road	DWay	Topography	Cond	Ad Valorem	SPI	R	Tax Value	Notes
1F RES	1.840 ac	80,000	E	100	100	100	100		100	80,000	0	N	80,000	
1F RES	0.360 ac	x 2,000	X	100					100	700	0	N	700	
	2.200 ac									80,700			**80,700**	

Map: 000R36 **Lot: 00001A** **Sub: 000000** **Card: 1 of 1** **83 EXETER RD** **KINGSTON** **Printed: 07/22/2016**

PICTURE

OWNER

TURNER, KATHERINE M

83 EXETER RD

KINGSTON, NH 03848

TAXABLE DISTRICTS

District	Percentage

PERMITS

Date	Permit ID	Permit Type	Notes
08/03/15	R26-1A	ALTERATION	KITCHEN REMODEL
05/04/10	R26-1A	ALTERATION	RESTRUCTURE GARAGE IN

BUILDING DETAILS

Model: **1.00 STORY FRAME RANCH**
Roof: **GABLE HIP/ASPHALT**
Ext: **CLAP BOARD**
Int: **DRYWALL**
Floor: **HARDWOOD/CARPET**
Heat: **OIL/HOT WATER**
Bedrooms: **3** Baths: **1.0** Fixtures:
Extra Kitchens: Fireplaces:
A/C: **Yes 100.00 %** Generators:
Quality: **A0 AVG**
Com. Wall:
Size Adj: **1.0642** Base Rate: **RSA 80.00**
Bldg. Rate: **1.0429**
Sq. Foot Cost: **$ 83.43**

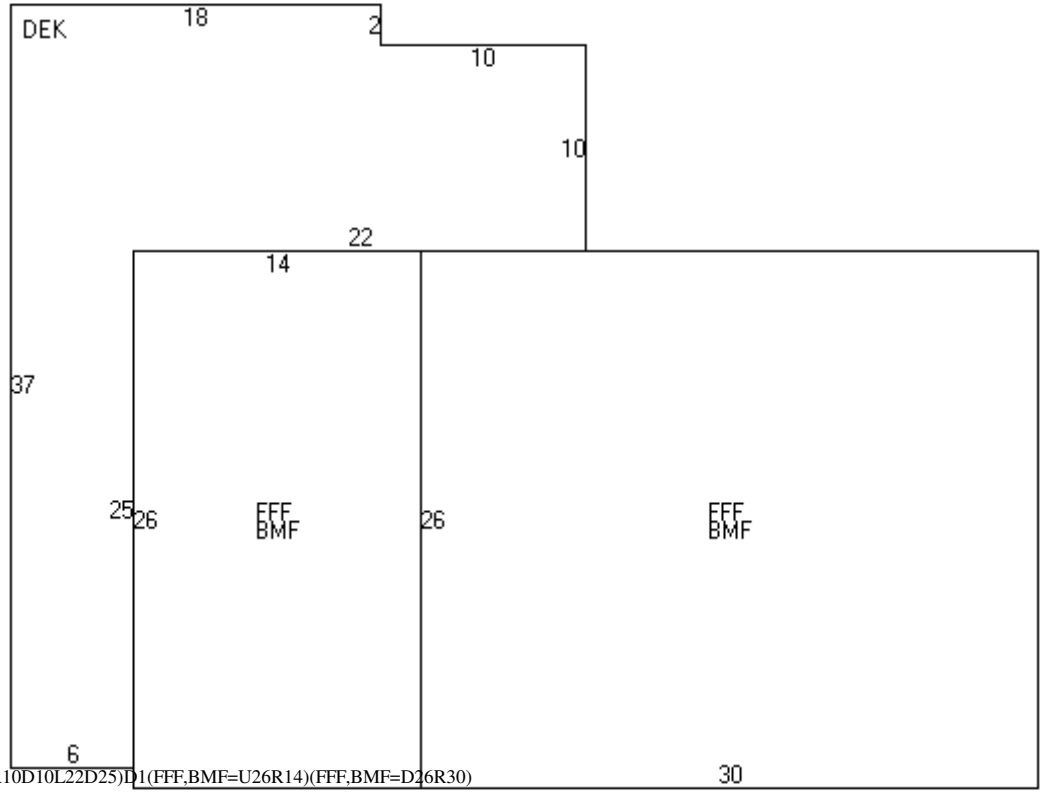

(DEK=L6U37R18D2R10D10L22D25)D1(FFF,BMF=U26R14)(FFF,BMF=D26R30)

BUILDING SUB AREA DETAILS

ID	Description	Area	Adj.	Effect.
DEK	DECK/ENTRANCE	466	0.10	47
FFF	FST FLR FIN	1144	1.00	1144
BMF	BSMNT FINISHED	1144	0.30	343
GLA:	**1,144**	**2,754**		**1,534**

2013 BASE YEAR BUILDING VALUATION

Market Cost New:		**$ 127,982**
Year Built:		**1980**
Condition For Age:	AVERAGE	**14 %**
Physical:		
Functional:		
Economic:		
Temporary:		
Total Depreciation:		**14 %**
Building Value:		**$ 110,100**

OWNER INFORMATION

FILLMORE, DOUGLAS ANDREW
BOLEY, NELL PARKER
102 EXETER RD

KINGSTON, NH 03848

SALES HISTORY

Date	Book	Page	Type	Price	Grantor
06/23/2016	5726	1014	Q I	325,000	KERKHOFF PHILLIP & JOAN,
10/23/1997	3247	1509	U I 82		KERKHOFF PHILLIP & JOAN

PICTURE

LISTING HISTORY

06/27/12	KCML	FPL HAS 1 GAS INSERT, COI
05/12/03	SH	
05/09/03	BW	

NOTES

D-32819. GREY. WATER IN BASEMENT, NO HEAT ON SECOND FLOOR (CHANGES MADE @ HEARINGS---RW). 12/05 ADJ AC PER LLA,

EXTRA FEATURES VALUATION

Feature Type	Units	Lngth x Width	Size Adj	Rate	Cond	Market Value	Notes
FIREPLACE 2-1	2		100	4,000.00	100	8,000	
SHED-WOOD	144	12 x 12	171	10.00	50	1,231	
BARN /LOFT/BSMNT	1,800	50 x 36	69	23.00	50	14,283	
SHED-WOOD	400	20 x 20	100	10.00	60	2,400	
SHED-WOOD	600	20 x 30	87	10.00	60	3,132	
SHED-WOOD	672	42 x 16	84	10.00	60	3,387	
SHED-WOOD	169	13 x 13	155	10.00	50	1,310	
SHED-WOOD	240	20 x 12	127	10.00	50	1,524	
SHED-WOOD	80	10 x 8	260	10.00	60	1,248	
LEAN-TO	80	10 x 8	260	3.00	60	374	
						36,900	

MUNICIPAL SOFTWARE BY AVITAR.

KINGSTON ASSESSING OFFICE

PARCEL TOTAL TAXABLE VALUE

Year	Building	Features	Land
2014	$ 177,800	$ 36,900	$ 81,007
		Parcel Total:	$ 295,707
2015	$ 177,800	$ 36,900	$ 80,949
		Parcel Total:	$ 295,649
2016	**$ 177,800**	**$ 36,900**	**$ 80,949**
		Parcel Total:	**$ 295,649**

LAND VALUATION

Zone: SFRAG SFR AGR **Minimum Acreage:** 1.84 **Minimum Frontage:** 200 **Site:** **Driveway:** **Road:**

Land Type	Units	Base Rate	NC	Adj	Site	Road	DWay	Topography	Cond	Ad Valorem	SPI	R	Tax Value	Notes
1F RES	1.840 ac	80,000	E	100	100	100	100		100	80,000	0	N	80,000	
1F RES	0.160 ac	x 2,000	X	92					85	300	0	N	300	TOPO
UNMNGD OTHER	16.480 ac	x 2,000	X	92					100	30,300	80	N	649	
	18.480 ac									110,600			**80,949**	

Map: 000R37 **Lot: 000001** **Sub: 000000** **Card: 1 of 1** **102 EXETER RD** **KINGSTON** **Printed: 07/22/2016**

PICTURE

OWNER

FILLMORE, DOUGLAS ANDREW
BOLEY, NELL PARKER
102 EXETER RD

KINGSTON, NH 03848

TAXABLE DISTRICTS

District	Percentage

PERMITS

Date	Permit ID	Permit Type	Notes

BUILDING DETAILS

Model: **2.00 STORY FRAME COLONIAL**
Roof: **GABLE HIP/ASPHALT**
Ext: **VINYL SIDING/WOOD SHINGLE**
Int: **DRYWALL/CUSTOM WOOD**
Floor: **PINE/SOFT WD**
Heat: **OIL/FA DUCTED**
Bedrooms: **4** Baths: **1.5** Fixtures:
Extra Kitchens: Fireplaces:
A/C: **Yes 50.00 %** Generators:
Quality: **A4 EXC**
Com. Wall:
Size Adj: **0.9083** Base Rate: **RSA 80.00**
Bldg. Rate: **1.2586**
Sq. Foot Cost: **$ 100.69**

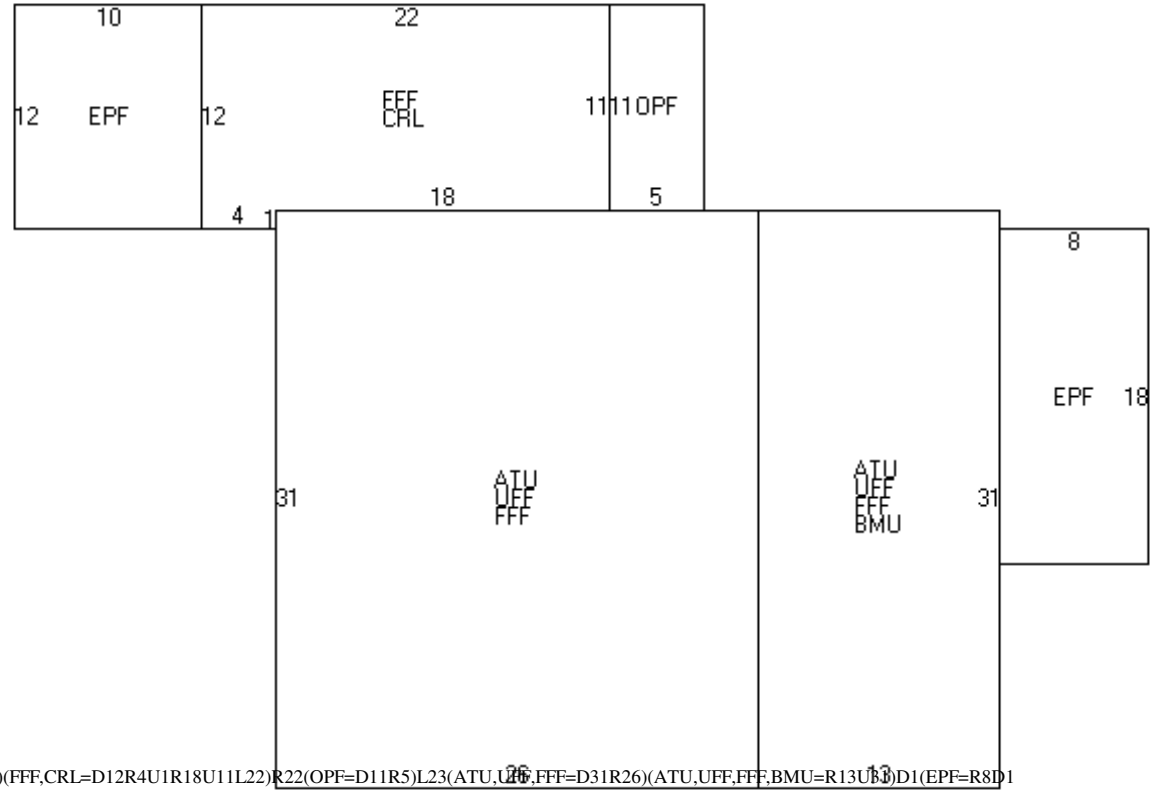

(EPF=U12R10)(FFF,CRL=D12R4U1R18U11L22)R22(OPF=D11R5)L23(ATU,UFF,FFF=D31R26)(ATU,UFF,FFF,BMU=R13U31)D1(EPF=R8D18)

BUILDING SUB AREA DETAILS

ID	Description	Area	Adj.	Effect.
EPF	ENCLSD PORCH	264	0.70	185
FFF	FST FLR FIN	1455	1.00	1455
CRL	CRAWL	246	0.00	0
OPF	OPEN PORCH FIN	55	0.25	14
ATU	ATTIC	1209	0.10	121
UFF	UPPER FLR FIN	1209	1.00	1209
BMU	BSMNT	403	0.15	60
GLA:	**2,849**	**4,841**		**3,044**

2013 BASE YEAR BUILDING VALUATION

Market Cost New:		**$ 306,500**
Year Built:		**1758**
Condition For Age:	GOOD	**32 %**
Physical:		
Functional:	HEAT	**10 %**
Economic:		
Temporary:		
Total Depreciation:		**42 %**
Building Value:		**$ 177,800**

OWNER INFORMATION

COPPELMAN, GLENN G.

108 EXETER RD

KINGSTON, NH 03848-3151

SALES HISTORY

Date	Book	Page	Type	Price	Grantor

PICTURE

LISTING HISTORY

02/20/13 KCPU
06/27/12 KCM
05/31/03 BW
05/12/03 BW

NOTES

GREY, ROOF LEAKS, BARN PRESERVATION EASEMENT- 95% ON LAND FOR THE EASEMENT, BARN 56 X 38 FT ENTERED AS HISTORIC PRESERVATION BARN RW, CORRECT LABELING 6/12KC 3/19/13 BOS APPROVED RENEWAL OF DISCRETIONARY EASEMENT FOR HISTORIC BARN, NVCHNG 2/13KC

EXTRA FEATURES VALUATION

Feature Type	Units	Lngth x Width	Size Adj	Rate	Cond	Market Value	Notes
FIREPLACE 1-1	1		100	3,000.00	100	3,000	
FIREPLACE 1-1	2		100	3,000.00	100	6,000	
HISTORIC BARN	1		100	33,536.00	50	16,768	
						25,800	

MUNICIPAL SOFTWARE BY AVITAR.

KINGSTON ASSESSING OFFICE

PARCEL TOTAL TAXABLE VALUE

Year	Building	Features	Land
2014	$ 152,800	$ 25,800	$ 78,300
		Parcel Total:	$ 256,900
2015	$ 152,800	$ 25,800	$ 78,300
		Parcel Total:	$ 256,900
2016	**$ 152,800**	**$ 25,800**	**$ 78,300**
		Parcel Total:	**$ 256,900**

LAND VALUATION

Zone: SFRAG SFR AGR **Minimum Acreage:** 1.84 **Minimum Frontage:** 200 **Site:** **Driveway:** **Road:**

Land Type	Units	Base Rate	NC	Adj	Site	Road	DWay	Topography	Cond	Ad Valorem	SPI	R	Tax Value	Notes
1F RES	1.840 ac	80,000	E	100	100	100	100		95	76,000	0	N	76,000	EASEMENT SEE NOTES
1F RES	1.160 ac	x 2,000	X	100					100	2,300	0	N	2,300	
	3.000 ac									78,300			**78,300**	

PICTURE

OWNER

COPPELMAN, GLENN G.

108 EXETER RD

KINGSTON, NH 03848-3151

TAXABLE DISTRICTS

District	Percentage

PERMITS

Date	Permit ID	Permit Type	Notes
05/31/12	R37-2	ELECTRIC PERMIT	WIRE SOLAR ELECTRIC SY

BUILDING DETAILS

Model: **1.75 STORY FRAME NEWENGLAND**
Roof: **GABLE HIP/ASPHALT**
Ext: **CLAP BOARD**
Int: **PLASTERED**
Floor: **PINE/SOFT WD/HARDWOOD**
Heat: **OIL/HOT WATER**
Bedrooms: **4** Baths: **1.0** Fixtures:
Extra Kitchens: Fireplaces:
A/C: **No** Generators:
Quality: **A1 AVG+10**
Com. Wall:
Size Adj: **0.9272** Base Rate: **RSA 80.00**
Bldg. Rate: **0.9491**
Sq. Foot Cost: **$ 75.93**

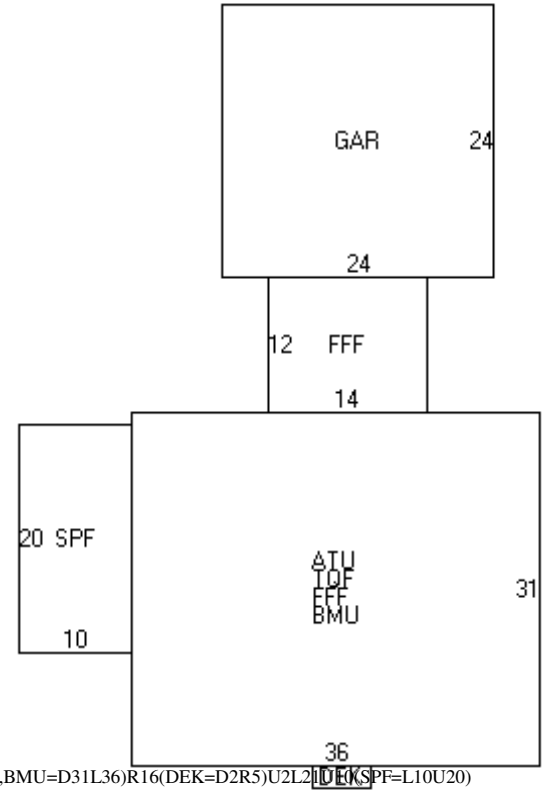

(GAR=D24L24)R4(FFF=D12R14)R10(ATU,TQF,FFF,BMU=D31L36)R16(DEK=D2R5)U2L2(SPF=L10U20)

BUILDING SUB AREA DETAILS

ID	Description	Area	Adj.	Effect.
GAR	GARAGE	576	0.45	259
FFF	FST FLR FIN	1284	1.00	1284
ATU	ATTIC	1116	0.10	112
TQF	3/4 STRY FIN	1116	0.75	837
BMU	BSMNT	1116	0.15	167
DEK	DECK/ENTRANCE	10	0.10	1
SPF	SCREEN PORCH	200	0.30	60
GLA:	**2,121**	**5,418**		**2,720**

2013 BASE YEAR BUILDING VALUATION

Market Cost New:		**$ 206,530**
Year Built:		**1845**
Condition For Age:	GOOD	**26 %**
Physical:		
Functional:		
Economic:		
Temporary:		
Total Depreciation:		**26 %**
Building Value:		**$ 152,800**

OWNER INFORMATION

FISH, JARED H.

110 EXETER ROAD

KINGSTON, NH 03848

SALES HISTORY

Date	Book	Page	Type	Price	Grantor
08/04/2009	5039	2113	Q I	150,000	CYNEWSKI, PATRICIA A.,
01/25/2008	4880	1954	U I 38		CYNEWSKI
11/07/2003	4189	0572	U I 38		CYNEWSKI
05/30/2003	4042	2993	Q I	200,000	SANBORN, PAMELA J

PICTURE

LISTING HISTORY

06/27/12 KCM
03/23/11 KCPU
04/15/10 KCX
02/26/09 FRR
03/21/08 FRX
05/12/03 BW

NOTES

GREEN- PROPERTY IS IN A TRUST - BARRY L. CYNEWSKI, TRUSTEE OF THE BARRY L. CYNEWSKI TRUST & PATRICIA CYNEWSKI, TRUSTEE OF THE PATRICIA A. CYNEWSKI TRUST., POLE BARN 80% COMP CHK09 FOR FIN 3/08FR. P/U BARN @ 100% FRR 3/09, CHK 2011 FOR HSE COMP, CHNG OPU TO OPF, REMOVE UC(EST HSE COMP) ADD CENTRAL AIR, & CHNG QUALITY TO A2 & YR BUILT 3/11KC

EXTRA FEATURES VALUATION

Feature Type	Units	Lngth x Width	Size Adj	Rate	Cond	Market Value	Notes
FIREPLACE 1-1	1		100	3,000.00	100	3,000	
SHED METAL	120	10 x 12	193	2.50	80	463	
BARN	480	20 x 24	93	16.20	100	7,232	
						10,700	

MUNICIPAL SOFTWARE BY AVITAR

KINGSTON ASSESSING OFFICE

PARCEL TOTAL TAXABLE VALUE

Year	Building	Features	Land
2014	$ 211,200	$ 10,700	$ 84,000
		Parcel Total:	$ 305,900
2015	$ 211,200	$ 10,700	$ 84,000
		Parcel Total:	$ 305,900
2016	**$ 211,200**	**$ 10,700**	**$ 84,000**
		Parcel Total:	**$ 305,900**

LAND VALUATION

Zone: SFRAG SFR AGR **Minimum Acreage:** 1.84 **Minimum Frontage:** 200 **Site:** **Driveway:** **Road:**

Land Type	Units	Base Rate	NC	Adj	Site	Road	DWay	Topography	Cond	Ad Valorem	SPI	R	Tax Value	Notes
1F RES	1.840 ac	80,000	E	100	100	100	100		100	80,000	0	N	80,000	
1F RES	2.660 ac	x 2,000	X	100					75	4,000	0	N	4,000	TOPO
	4.500 ac									84,000			**84,000**	

Map: 000R37 Lot: 000003 Sub: 000000 Card: 1 of 1 110 EXETER RD KINGSTON Printed: 07/22/2016

PICTURE

OWNER

FISH, JARED H.

110 EXETER ROAD

KINGSTON, NH 03848

TAXABLE DISTRICTS

District	Percentage

PERMITS

Date	Permit ID	Permit Type	Notes
11/05/09	R37-3	ADDITION	ADD SECOND STORY, REM
02/12/08	R37-3	NEW BUILDING	20 X 24 POLE BARN

BUILDING DETAILS

Model: **2.00 STORY FRAME COLONIAL**
Roof: **GABLE HIP/ASPHALT**
Ext: **CLAP BOARD**
Int: **DRYWALL**
Floor: **HARDWOOD/CARPET**
Heat: **OIL/HOT WATER**
Bedrooms: **3** Baths: **2.5** Fixtures:
Extra Kitchens: Fireplaces:
A/C: **Yes 100.00 %** Generators:
Quality: **A2 AVG+20**
Com. Wall:
Size Adj: **0.9472** Base Rate: **RSA 80.00**
Bldg. Rate: **1.1250**
Sq. Foot Cost: **$ 90.00**

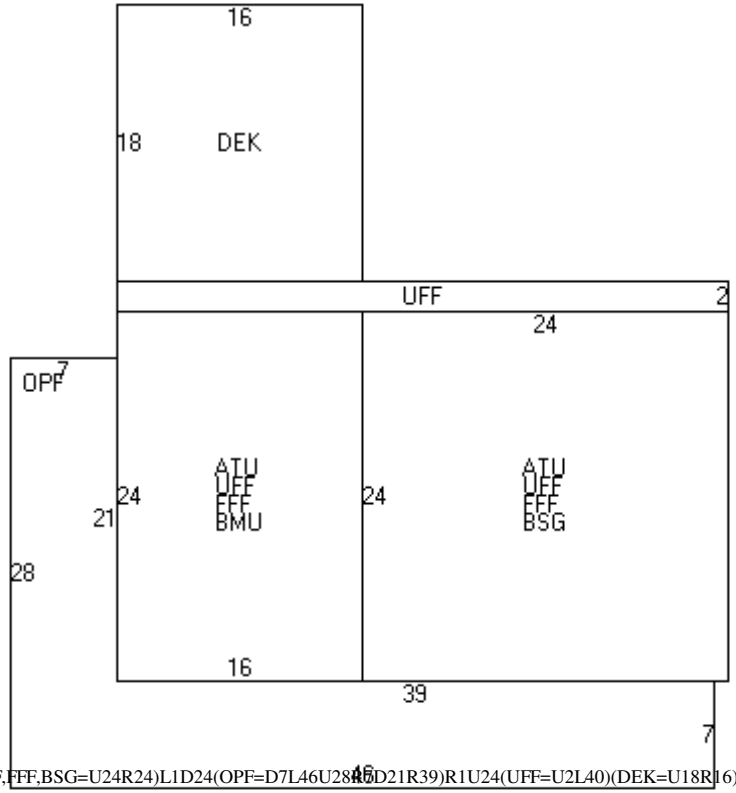

(ATU,UFF,FFF,BMU=D24R16)(ATU,UFF,FFF,BSG=U24R24)L1D24(OPF=D7L46U28R7D21R39)R1U24(UFF=U2L40)(DEK=U18R16)

BUILDING SUB AREA DETAILS

ID	Description	Area	Adj.	Effect.
ATU	ATTIC	960	0.10	96
UFF	UPPER FLR FIN	1040	1.00	1040
FFF	FST FLR FIN	960	1.00	960
BMU	BSMNT	384	0.15	58
BSG	BSMT GAR	576	0.25	144
OPF	OPEN PORCH FIN	469	0.25	117
DEK	DECK/ENTRANCE	288	0.10	29
GLA:	**2,000**	**4,677**		**2,444**

2013 BASE YEAR BUILDING VALUATION

Market Cost New:		**$ 219,960**
Year Built:		**2009**
Condition For Age:	AVERAGE	**4 %**
Physical:		
Functional:		
Economic:		
Temporary:		
Total Depreciation:		**4 %**
Building Value:		**$ 211,200**

OWNER INFORMATION

CYNEWSKI, PATRICIA A., TR
PATRICIA A. CYNEWSKI REV TR
8 SOUTH RD

EXETER, NH 03833-3152

SALES HISTORY

Date	Book	Page	Type	Price	Grantor
01/25/2008	4880	1950	U I 38		CYNEWSKI TRUST

PICTURE

LISTING HISTORY

06/27/12 KCM
04/20/07 JARX
03/30/06 JARX
05/12/03 BW

NOTES

WHITE, SHED DORMERS = UFF, 3/05 NO START CHK 06-BW. NC CK 07 FOR GAR JAR 03/06. NO GAR CK 08 JAR 4/07

EXTRA FEATURES VALUATION

Feature Type	Units	Lngth x Width	Size Adj	Rate	Cond	Market Value	Notes
FIREPLACE 1-1	1		100	3,000.00	100	3,000	
BARN /LOFT	704	32 x 22	83	18.00	70	7,362	
SHED-WOOD	336	12 x 28	108	10.00	70	2,540	
						12,900	

MUNICIPAL SOFTWARE BY AVITAR

KINGSTON ASSESSING OFFICE

PARCEL TOTAL TAXABLE VALUE

Year	Building	Features	Land
2014	$ 140,900	$ 12,900	$ 94,600
		Parcel Total:	$ 248,400
2015	$ 140,900	$ 12,900	$ 94,600
		Parcel Total:	$ 248,400
2016	**$ 140,900**	**$ 12,900**	**$ 94,600**
		Parcel Total:	**$ 248,400**

LAND VALUATION

Zone: SFRAG SFR AGR **Minimum Acreage:** 1.84 **Minimum Frontage:** 200 **Site:** **Driveway:** **Road:**

Land Type	Units	Base Rate	NC	Adj	Site	Road	DWay	Topography	Cond	Ad Valorem	SPI	R	Tax Value	Notes
1F RES	1.840 ac	80,000	E	100	100	100	100		100	80,000	0	N	80,000	
1F RES	7.660 ac	x 2,000	X	95					100	14,600	0	N	14,600	
	9.500 ac									94,600			**94,600**	

Map: 000R37 **Lot: 000004** **Sub: 000000** **Card: 1 of 1** **116 EXETER RD** **KINGSTON** **Printed: 07/22/2016**

PICTURE

OWNER

CYNEWSKI, PATRICIA A., TR
PATRICIA A. CYNEWSKI REV TR
8 SOUTH RD

EXETER, NH 03833-3152

TAXABLE DISTRICTS

District	Percentage

PERMITS

Date	Permit ID	Permit Type	Notes
07/26/04	R37-6E	GARAGE	3 STALL GARAGE

BUILDING DETAILS

Model: **2.00 STORY FRAME NEWENGLAND**
Roof: **GABLE HIP/ASPHALT**
Ext: **VINYL SIDING**
Int: **DRYWALL**
Floor: **HARDWOOD/CARPET**
Heat: **OIL/HOT WATER**
Bedrooms: **4** Baths: **2.0** Fixtures:
Extra Kitchens: Fireplaces:
A/C: **No** Generators:
Quality: **A1 AVG+10**
Com. Wall:
Size Adj: **0.9325** Base Rate: **RSA 80.00**
Bldg. Rate: **0.9952**
Sq. Foot Cost: **$ 79.61**

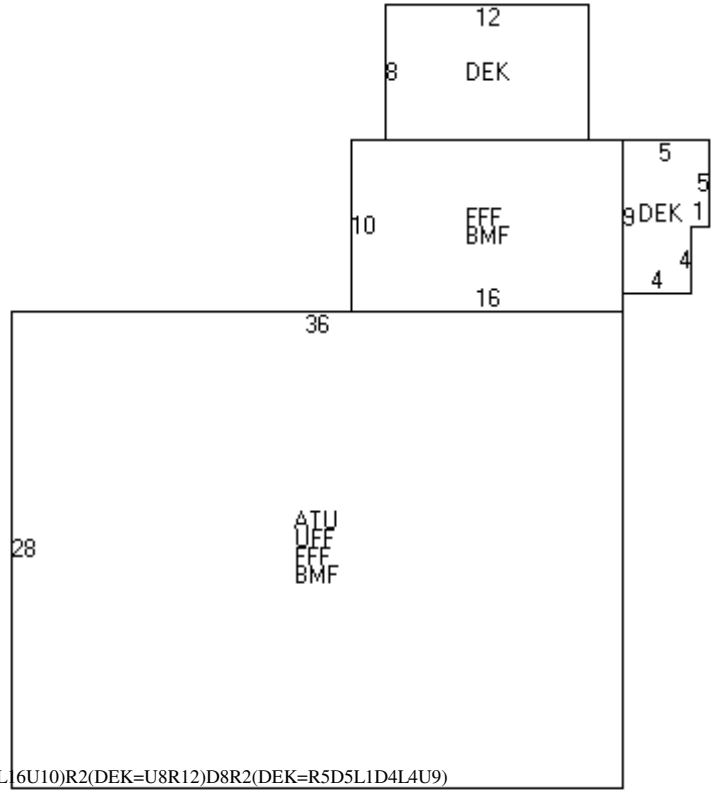

(ATU,UFF,FFF,BMF=U28R36)(FFF,BMF=L16U10)R2(DEK=U8R12)D8R2(DEK=R5D5L1D4L4U9)

BUILDING SUB AREA DETAILS

ID	Description	Area	Adj.	Effect.
ATU	ATTIC	1008	0.10	101
UFF	UPPER FLR FIN	1008	1.00	1008
FFF	FST FLR FIN	1168	1.00	1168
BMF	BSMNT FINISHED	1168	0.30	350
DEK	DECK/ENTRANCE	137	0.10	14
GLA:	**2,176**	**4,489**		**2,641**

2013 BASE YEAR BUILDING VALUATION

Market Cost New:		**$ 210,250**
Year Built:		**1840**
Condition For Age:	AVERAGE	**33 %**
Physical:		
Functional:		
Economic:		
Temporary:		
Total Depreciation:		**33 %**
Building Value:		**$ 140,900**

OWNER INFORMATION

RAY, DANIEL E. JR., HEIRS
RAY, GLADYS M
106 EXETER RD

KINGSTON, NH 03848

SALES HISTORY

Date	Book	Page	Type	Price	Grantor

PICTURE

LISTING HISTORY

06/27/12 KCML
05/09/03 BW

NOTES

GREY, REFUSED ENTRENCE TO ENTIRE HOUSE WAS ONLY LET IN TO FRONT ROOM- HUSBAND NOT WELL, HOUSE NEEDS PAINT & TRIM INSIDE 2/09 ADJ AC PER SURVEY RW, CORRECT EXTRA FEATURES, ADJ LAND & HSE COND, CORRECT SIDING & INT WALLS 6/12KC

EXTRA FEATURES VALUATION

Feature Type	Units	Lngth x Width	Size Adj	Rate	Cond	Market Value	Notes
FIREPLACE GAS	1		100	2,500.00	100	2,500	
SHED-WOOD	80	8 x 10	260	10.00	70	1,456	
SHED-WOOD	64	8 x 8	310	10.00	50	992	
SHED-WOOD	24	4 x 6	400	10.00	80	768	
						5,700	

MUNICIPAL SOFTWARE BY AVITAR

KINGSTON ASSESSING OFFICE

PARCEL TOTAL TAXABLE VALUE

Year	Building	Features	Land
2014	$ 78,200	$ 5,700	$ 86,300
		Parcel Total:	$ 170,200
2015	$ 78,200	$ 5,700	$ 86,300
		Parcel Total:	$ 170,200
2016	**$ 78,200**	**$ 5,700**	**$ 86,300**
		Parcel Total:	**$ 170,200**

LAND VALUATION

Zone: SFRAG SFR AGR **Minimum Acreage:** 1.84 **Minimum Frontage:** 200 **Site:** **Driveway:** **Road:**

Land Type	Units	Base Rate	NC	Adj	Site	Road	DWay	Topography	Cond	Ad Valorem	SPI	R	Tax Value	Notes
1F RES	1.840 ac	80,000	E	100	100	100	100		100	80,000	0	N	80,000	
1F RES	3.585 ac	x 2,000	X	97					90	6,300	0	N	6,300	WET
	5.425 ac									86,300			**86,300**	

Map: 000R37 **Lot: 00001A** **Sub: 000000** **Card: 1 of 1** **106 EXETER RD** **KINGSTON** **Printed: 07/22/2016**

PICTURE

OWNER

RAY, DANIEL E. JR., HEIRS
RAY, GLADYS M
106 EXETER RD

KINGSTON, NH 03848

TAXABLE DISTRICTS

District	Percentage

PERMITS

Date	Permit ID	Permit Type	Notes

BUILDING DETAILS

Model: **1.00 STORY FRAME RANCH**
Roof: **GABLE HIP/ASPHALT**
Ext: **VINYL SIDING/WOOD SHINGLE**
Int: **PLYWOOD PANEL/CUSTOM WOOD**
Floor: **LINOLEUM OR SIM/CARPET**
Heat: **OIL/FA DUCTED**
Bedrooms: **2** Baths: **1.5** Fixtures:
Extra Kitchens: Fireplaces:
A/C: **No** Generators:
Quality: **A1 AVG+10**
Com. Wall:
Size Adj: **0.8317** Base Rate: **MHD 50.00**
Bldg. Rate: **0.8874**
Sq. Foot Cost: **$ 44.37**

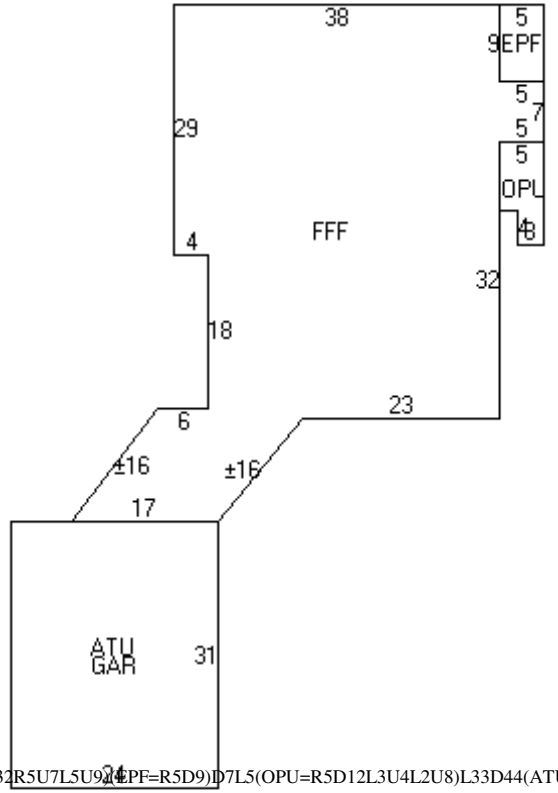

(FFF=L38D29R4D18L6[L10D13]R17[R10U12]R23U32R5U7L5U9(EPF=R5D9)D7L5(OPU=R5D12L3U4L2U8)L33D44(ATU,GAR=D31L24)

BUILDING SUB AREA DETAILS

ID	Description	Area	Adj.	Effect.
FFF	FST FLR FIN	1998	1.00	1998
EPF	ENCLSD PORCH	45	0.70	32
OPU	OPEN PORCH	52	0.15	8
ATU	ATTIC	744	0.10	74
GAR	GARAGE	744	0.45	335
GLA:	**2,030**	**3,583**		**2,447**

2013 BASE YEAR BUILDING VALUATION

Market Cost New:		**$ 108,573**
Year Built:		**1982**
Condition For Age:	AVERAGE	**28 %**
Physical:		
Functional:		
Economic:		
Temporary:		
Total Depreciation:		**28 %**
Building Value:		**$ 78,200**

OWNER INFORMATION

SOUSA, STEPHEN T
SOUSA, MARY H
171 KINGSTON RD

EXETER , NH 03833-4332

SALES HISTORY

Date	Book	Page	Type	Price	Grantor

PICTURE

LISTING HISTORY

03/27/16	KCPU
03/10/14	KCPU
03/30/06	JARX
03/01/05	BW O
05/13/03	BW

NOTES

YELLOW, 3/05 GAR 100%(2ND STY UNFIN), CHK 06 FOR BUILD ON 16X16 FNDTN-BW. NO BUILDING ON FNDTN, P/U NEW ADD AND OPF 100% JAR 03/06, CORRECT SKETCH LABELING-ADD DEK, CHNG INT INFO & COND, CORRECT EXTRA FEATURES 6/12KC, EST WORK SHOP COMP NOH 3/14KC, CHK 2017 FOR SOLAR COMP 3/16KC

EXTRA FEATURES VALUATION

Feature Type	Units	Lngth x Width	Size Adj	Rate	Cond	Market Value	Notes
SHED-WOOD	96	8 x 12	227	10.00	0	0	NV
GARAGE-2STRY	672	24 x 28	84	40.00	100	22,579	
SHOP-1	256	16 x 16	123	34.00	100	10,706	
OPEN PORCH	96	6 x 16	227	12.50	100	2,724	
						36,000	

MUNICIPAL SOFTWARE BY AVITAR

KINGSTON ASSESSING OFFICE

PARCEL TOTAL TAXABLE VALUE

Year	Building	Features	Land
2014	$ 148,000	$ 36,000	$ 75,800
		Parcel Total:	$ 259,800
2015	$ 148,000	$ 36,000	$ 75,800
		Parcel Total:	$ 259,800
2016	**$ 148,000**	**$ 36,000**	**$ 75,800**
		Parcel Total:	**$ 259,800**

LAND VALUATION

Zone: SFRAG SFR AGR **Minimum Acreage:** 1.84 **Minimum Frontage:** 200 **Site:** **Driveway:** **Road:**

Land Type	Units	Base Rate	NC	Adj	Site	Road	DWay	Topography	Cond	Ad Valorem	SPI	R	Tax Value	Notes
1F RES	0.800 ac	75,800	E	100	100	100	100		100	75,800	0	N	75,800	
	0.800 ac									75,800			**75,800**	

Map: 000R37 Lot: 000021 Sub: 000000 Card: 1 of 1 127 EXETER RD KINGSTON Printed: 07/22/2016

PICTURE

OWNER

SOUSA, STEPHEN T
SOUSA, MARY H
171 KINGSTON RD

EXETER , NH 03833-4332

TAXABLE DISTRICTS

District	Percentage

PERMITS

Date	Permit ID	Permit Type	Notes
03/07/16	r37-21	ALTERATION	INSTALL 15 SOLAR PANEL
12/01/15	R37-21	ELECTRIC PERMIT	FOR SOLAR ARRAY
07/19/13	R37-21	ELECTRIC PERMIT	WIRE ACCESSORY BUILDI
06/03/13	R37-21	EXTERIOR ONLY	16 X 16 WORKSHOP; 6 X 16
06/25/05	R37-21	ALTERATION	RENOVATIONS TO BATHR
10/15/04	R37-21	GARAGE	2 PRE-FAB BUILDINGS
10/04/04	R37-21	DEMOLITION	DEMOLISH GARAGE & UTI

BUILDING DETAILS

Model: **2.00 STORY FRAME COLONIAL**
Roof: **GABLE HIP/ASPHALT**
Ext: **CLAP BOARD**
Int: **PLASTERED/DRYWALL**
Floor: **PINE/SOFT WD/CARPET**
Heat: **OIL/STEAM**
Bedrooms: **3** Baths: **1.5** Fixtures:
Extra Kitchens: Fireplaces:
A/C: **No** Generators:
Quality: **A1 AVG+10**
Com. Wall:
Size Adj: **0.9345** Base Rate: **RSA 80.00**
Bldg. Rate: **0.9570**
Sq. Foot Cost: **$ 76.56**

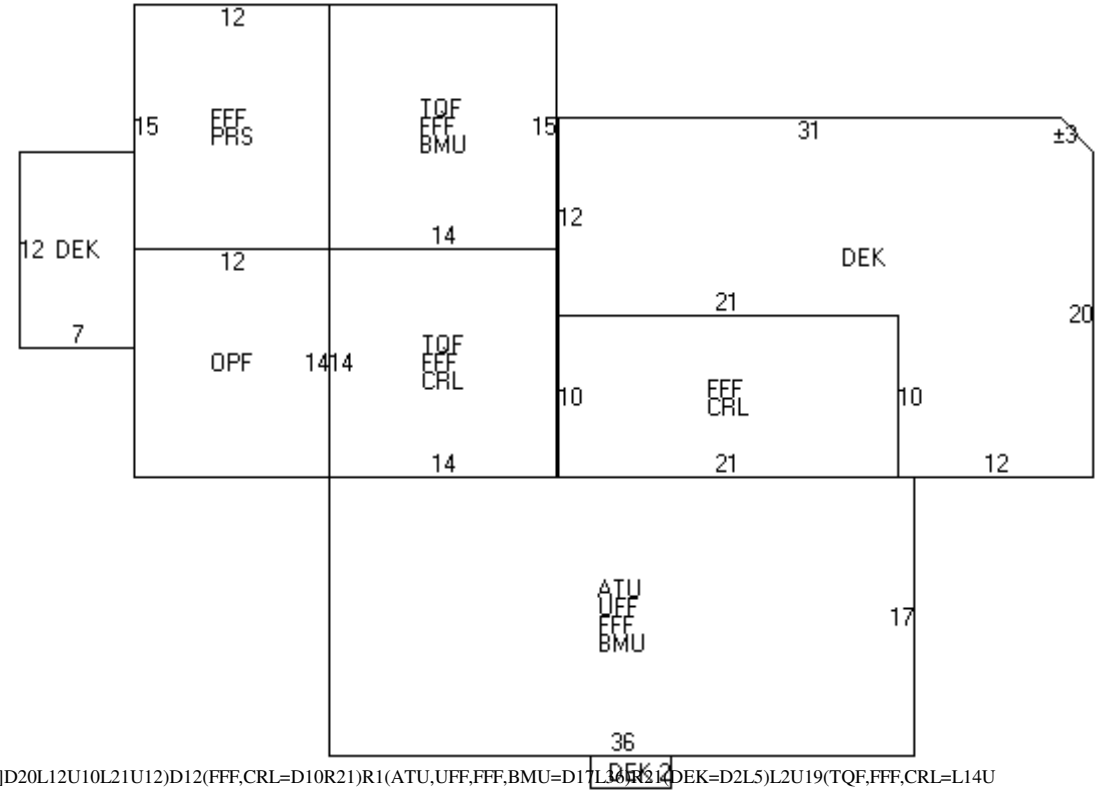

(DEK=R31[R2D2]D20L12U10L21U12)D12(FFF,CRL=D10R21)R1(ATU,UFF,FFF,BMU=D17L36R14)(DEK=D2L5)L2U19(TQF,FFF,CRL=L14U14)(TQF,FFF,BMU=R14U15)L14(FFF,PRS=L12D15)(OPF=R12D14)L12U8(DEK=L7U12)

BUILDING SUB AREA DETAILS

ID	Description	Area	Adj.	Effect.
DEK	DECK/ENTRANCE	608	0.10	61
FFF	FST FLR FIN	1408	1.00	1408
CRL	CRAWL	406	0.00	0
ATU	ATTIC	612	0.10	61
UFF	UPPER FLR FIN	612	1.00	612
BMU	BSMNT	822	0.15	123
TQF	3/4 STRY FIN	406	0.75	305
PRS	PIERS/POSTS	180	0.00	0
OPF	OPEN PORCH FIN	168	0.25	42
GLA:	**2,325**	**5,222**		**2,612**

2013 BASE YEAR BUILDING VALUATION

Market Cost New:		**$ 199,975**
Year Built:		**1850**
Condition For Age:	GOOD	**26 %**
Physical:		
Functional:		
Economic:		
Temporary:		
Total Depreciation:		**26 %**
Building Value:		**$ 148,000**

OWNER INFORMATION

ARSENAULT, RONALD C.

115 POND STREET

NEWTON, NH 03858

SALES HISTORY

Date	Book	Page	Type	Price	Grantor
12/23/2010	5179	2020	U I 51	134,900	FEDERAL NATIONAL
08/11/2010	5133	2210	U I 51		RICCARDI, JOSEPHINE C.
07/16/2010	5126	1592	U I 38		RICCARDI, PHILLIP
10/02/2007	4849	0352	U I 38		RICCARDI
02/02/2004	4229	901	Q I	222,000	BLATCHFORD

PICTURE

LISTING HISTORY

06/29/12 KCM
05/13/03 BW

NOTES

RED. CORRECT SKETCH 6/12KC

EXTRA FEATURES VALUATION

Feature Type	Units	Lngth x Width	Size Adj	Rate	Cond	Market Value	Notes
FIREPLACE 1-1	1		100	3,000.00	100	3,000	
BARN	864	36 x 24	79	16.20	60	6,634	
						9,600	

MUNICIPAL SOFTWARE BY AVITAR

KINGSTON ASSESSING OFFICE

PARCEL TOTAL TAXABLE VALUE

Year	Building	Features	Land
2014	$ 123,800	$ 9,600	$ 80,300
		Parcel Total:	$ 213,700
2015	$ 123,800	$ 9,600	$ 80,300
		Parcel Total:	$ 213,700
2016	**$ 123,800**	**$ 9,600**	**$ 80,300**
		Parcel Total:	**$ 213,700**

LAND VALUATION

Zone: SFRAG SFR AGR **Minimum Acreage:** 1.84 **Minimum Frontage:** 200 **Site:** **Driveway:** **Road:**

Land Type	Units	Base Rate	NC	Adj	Site	Road	DWay	Topography	Cond	Ad Valorem	SPI	R	Tax Value	Notes
1F RES	1.840 ac	80,000	E	100	100	100	100		100	80,000	0	N	80,000	
1F RES	0.160 ac	x 2,000	X	100					100	300	0	N	300	
	2.000 ac									80,300			**80,300**	

Map: 000R37 **Lot: 000022** **Sub: 000000** **Card: 1 of 1** **125 EXETER RD** **KINGSTON** **Printed: 07/22/2016**

PICTURE

OWNER

ARSENAULT, RONALD C.

115 POND STREET

NEWTON, NH 03858

TAXABLE DISTRICTS

District	Percentage

PERMITS

Date	Permit ID	Permit Type	Notes

BUILDING DETAILS

Model: **1.00 STORY FRAME RANCH**
Roof: **GABLE HIP/ASPHALT**
Ext: **CLAP BOARD/BOARD/BATTEN**
Int: **PLASTERED/DRYWALL**
Floor: **HARDWOOD/CARPET**
Heat: **OIL/HOT WATER**
Bedrooms: **3** Baths: **2.0** Fixtures:
Extra Kitchens: Fireplaces:
A/C: **No** Generators:
Quality: **A0 AVG**
Com. Wall:
Size Adj: **0.9299** Base Rate: **RSA 80.00**
Bldg. Rate: **0.9020**
Sq. Foot Cost: **$ 72.16**

BUILDING SUB AREA DETAILS

ID	Description	Area	Adj.	Effect.
ATU	ATTIC	2008	0.10	201
GAR	GARAGE	576	0.45	259
OPU	OPEN PORCH	64	0.15	10
FFF	FST FLR FIN	1922	1.00	1922
BMU	BSMNT	1922	0.15	288
GLA:	**1,922**	**6,492**		**2,680**

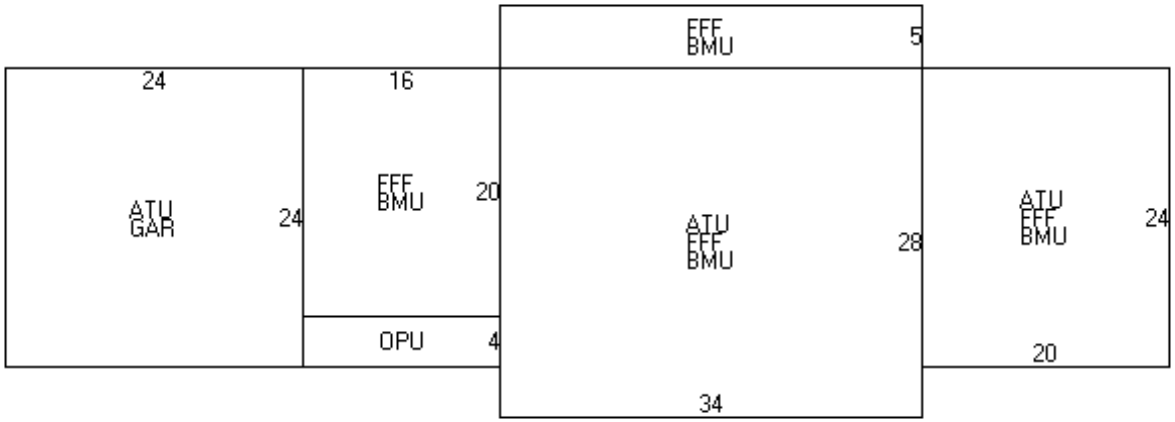

(ATU,GAR=R24D24)(OPU=R16U4)(FFF,BMU=U20L16)R16U5(FFF,BMU=R34D5)(ATU,FFF,BMU=D28L34)R34U4(ATU,FFF,BMU=R20U24)

2013 BASE YEAR BUILDING VALUATION

Market Cost New:		**$ 193,389**
Year Built:		**1800**
Condition For Age:	AVERAGE	**36 %**
Physical:		
Functional:		
Economic:		
Temporary:		
Total Depreciation:		**36 %**
Building Value:		**$ 123,800**

OWNER INFORMATION

BUXTON, BRENDAN
STEVENS, MILLAY
123 EXETER RD

KINGSTON, NH 03848

SALES HISTORY

Date	Book	Page	Type	Price	Grantor
08/06/2004	4342	1902	Q I	344,000	ROBERTS

PICTURE

LISTING HISTORY

07/02/12 KCML
05/13/03 BW

NOTES

GREY, CORRECT SKETCH LABELING & EXTRA FEATURES 7/12KC

EXTRA FEATURES VALUATION

Feature Type	Units	Lngth x Width	Size Adj	Rate	Cond	Market Value	Notes
GARAGE	330	15 x 22	108	30.00	65	6,950	
BARN /LOFT/BSMNT	960	30 x 32	77	23.00	65	11,051	
						18,000	

MUNICIPAL SOFTWARE BY AVITAR

KINGSTON ASSESSING OFFICE

PARCEL TOTAL TAXABLE VALUE

Year	Building	Features	Land
2014	$ 133,400	$ 18,000	$ 80,000
		Parcel Total:	$ 231,400
2015	$ 133,400	$ 18,000	$ 80,000
		Parcel Total:	$ 231,400
2016	**$ 133,400**	**$ 18,000**	**$ 80,000**
		Parcel Total:	**$ 231,400**

LAND VALUATION

Zone: SFRAG SFR AGR **Minimum Acreage:** 1.84 **Minimum Frontage:** 200 **Site:** **Driveway:** **Road:**

Land Type	Units	Base Rate	NC	Adj	Site	Road	DWay	Topography	Cond	Ad Valorem	SPI	R	Tax Value	Notes
1F RES	1.840 ac	80,000	E	100	100	100	100		100	80,000	0	N	80,000	
	1.840 ac									80,000			**80,000**	

PICTURE

OWNER

BUXTON, BRENDAN
STEVENS, MILLAY
123 EXETER RD

KINGSTON, NH 03848

TAXABLE DISTRICTS

District	Percentage

PERMITS

Date	Permit ID	Permit Type	Notes

BUILDING DETAILS

Model: **1.75 STORY FRAME SALT BOX**
Roof: **GABLE HIP/ASPHALT**
Ext: **VINYL SIDING**
Int: **PLASTERED/DRYWALL**
Floor: **HARDWOOD/CARPET**
Heat: **OIL/HOT WATER**
Bedrooms: **3** Baths: **2.0** Fixtures:
Extra Kitchens: Fireplaces:
A/C: **No** Generators:
Quality: **A0 AVG**
Com. Wall:
Size Adj: **0.9430** Base Rate: **RSA 80.00**
Bldg. Rate: **0.9149**
Sq. Foot Cost: **$ 73.19**

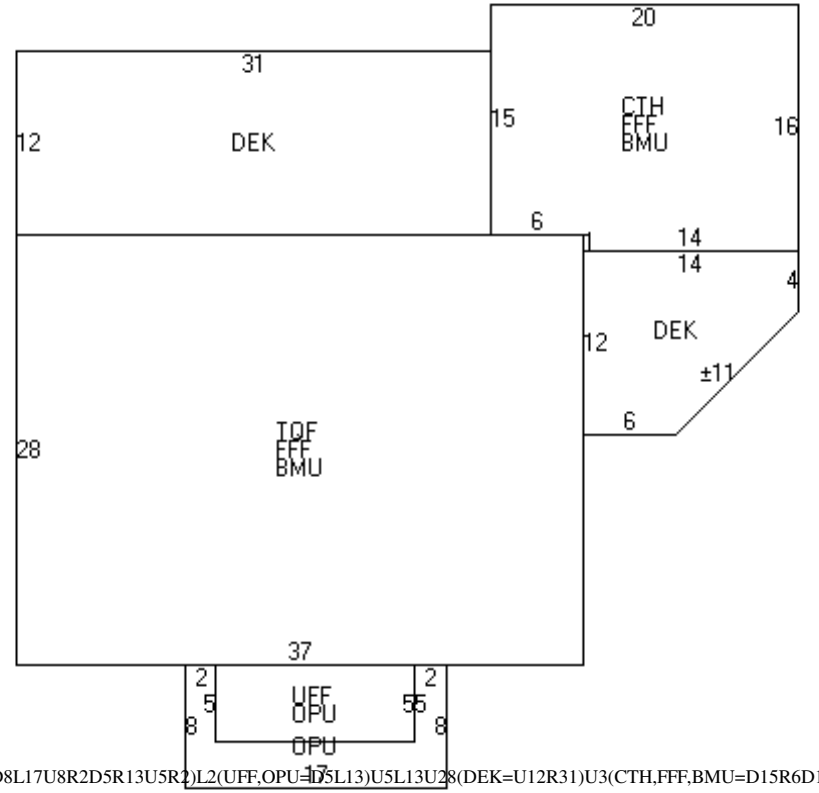

(TQF,FFF,BMU=D28R37)L9(OPU=D8L17U8R2D5R13U5R2)L2(UFF,OPU=D5L13)U5L13U28(DEK=U12R31)U3(CTH,FFF,BMU=D15R6D1R14U16L20)D15R6D1(DEK=D12R6[R8U8]U4L14)

BUILDING SUB AREA DETAILS

ID	Description	Area	Adj.	Effect.
TQF	3/4 STRY FIN	1036	0.75	777
FFF	FST FLR FIN	1350	1.00	1350
BMU	BSMNT	1350	0.15	203
OPU	OPEN PORCH	136	0.15	20
UFF	UPPER FLR FIN	65	1.00	65
DEK	DECK/ENTRANCE	508	0.10	51
CTH	CATHEDRAL	314	0.10	31
GLA:	**2,192**	**4,759**		**2,497**

2013 BASE YEAR BUILDING VALUATION

Market Cost New:		**$ 182,755**
Year Built:		**1900**
Condition For Age:	AVERAGE	**27 %**
Physical:		
Functional:		
Economic:		
Temporary:		
Total Depreciation:		**27 %**
Building Value:		**$ 133,400**

OWNER INFORMATION

BAKIE, PETER G
BAKIE, TAMMY L.
109 EXETER RD

KINGSTON, NH 03848-3114

SALES HISTORY

Date	Book	Page	Type	Price	Grantor

PICTURE

LISTING HISTORY

07/02/12 KCM
03/30/06 JARX
04/20/04 SH X
05/13/03 BW

NOTES

GREY, RECHECK 2004- REMOVEAL OF MOBILE HOME , NOH PU NEW LEAN TO ATTACHED TO GAR JAR 03/06, CORRECT LABELING-COND-&EXTRA FEATURES 7/12KC

EXTRA FEATURES VALUATION

Feature Type	Units	Lngth x Width	Size Adj	Rate	Cond	Market Value	Notes
FIREPLACE 1-1	1		100	3,000.00	100	3,000	
BARN 1.5 STORY	1,120	28 x 40	74	18.00	100	14,918	
LEAN-TO	160	8 x 20	160	3.00	100	768	
SHED-WOOD	160	10 x 16	160	10.00	100	2,560	
						21,200	

MUNICIPAL SOFTWARE BY AVITAR

KINGSTON ASSESSING OFFICE

PARCEL TOTAL TAXABLE VALUE

Year	Building	Features	Land
2014	$ 233,300	$ 21,200	$ 81,300
		Parcel Total:	$ 335,800
2015	$ 233,300	$ 21,200	$ 81,300
		Parcel Total:	$ 335,800
2016	**$ 233,300**	**$ 21,200**	**$ 81,300**
		Parcel Total:	**$ 335,800**

LAND VALUATION

Zone: SFRAG SFR AGR **Minimum Acreage:** 1.84 **Minimum Frontage:** 200 **Site:** **Driveway:** **Road:**

Land Type	Units	Base Rate	NC	Adj	Site	Road	DWay	Topography	Cond	Ad Valorem	SPI	R	Tax Value	Notes
1F RES	1.840 ac	80,000	E	100	100	100	100		100	80,000	0	N	80,000	
1F RES	0.660 ac	x 2,000	X	100					100	1,300	0	N	1,300	
	2.500 ac									81,300			**81,300**	

Map: 000R37 **Lot: 000025** **Sub: 000000** **Card: 1 of 1** **109 EXETER RD** **KINGSTON** **Printed: 07/22/2016**

PICTURE

OWNER

BAKIE, PETER G
BAKIE, TAMMY L.
109 EXETER RD

KINGSTON, NH 03848-3114

TAXABLE DISTRICTS

District	Percentage

PERMITS

Date	Permit ID	Permit Type	Notes
10/04/05	R37-25	EXTERIOR ONLY	8 X 20 LEAN TO OFF SIDE C
08/01/03	R37-25	BUILDING	28 X 40 BARN

BUILDING DETAILS

Model: **1.00 STORY FRAME RANCH**
Roof: **GABLE HIP/ASPHALT**
Ext: **VINYL SIDING**
Int: **DRYWALL**
Floor: **HARDWOOD/CARPET**
Heat: **OIL/HOT WATER**
Bedrooms: **3** Baths: **2.0** Fixtures:
Extra Kitchens: Fireplaces:
A/C: **Yes 100.00 %** Generators:
Quality: **A1 AVG+10**
Com. Wall:
Size Adj: **0.9043** Base Rate: **RSA 80.00**
Bldg. Rate: **1.0146**
Sq. Foot Cost: **$ 81.17**

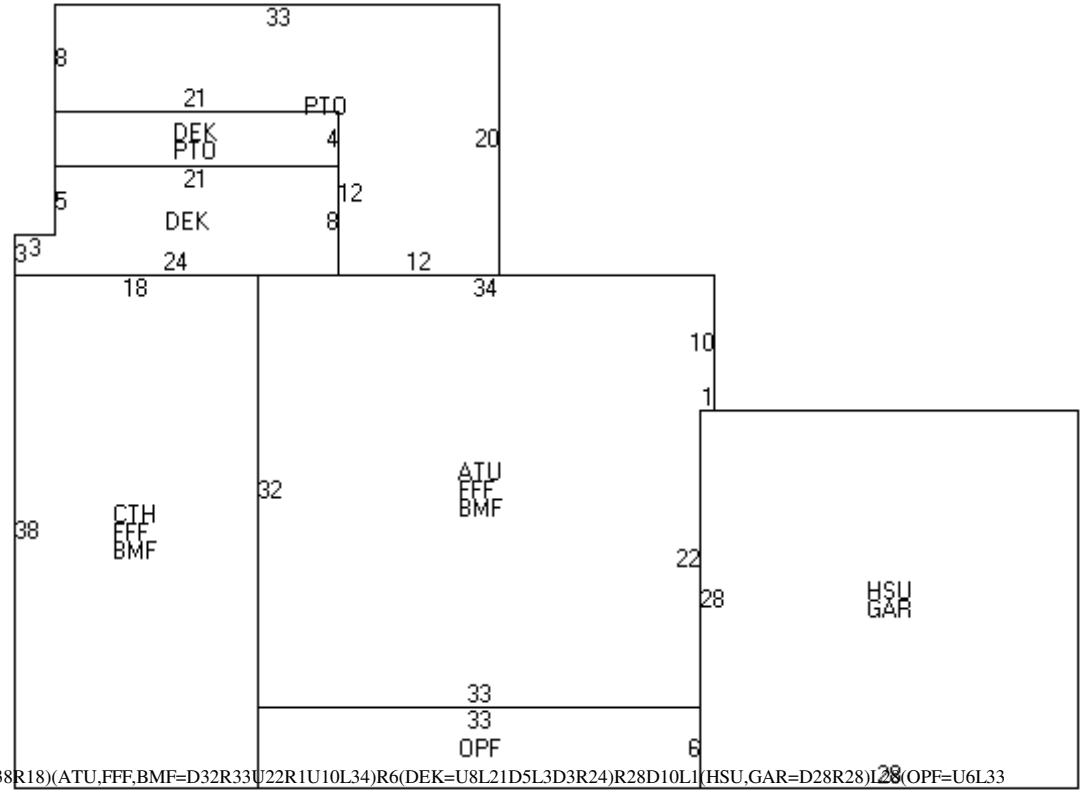

(CTH,FFF,BMF=U38R18)(ATU,FFF,BMF=D32R33U22R1U10L34)R6(DEK=U8L21D5L3D3R24)R28D10L1(HSU,GAR=D28R28)L28(OPF=U6L33)R6U32(PTO=R12U20L33D8R21D12)U8(DEK,PTO=U4L21)

BUILDING SUB AREA DETAILS

ID	Description	Area	Adj.	Effect.
PTO	PATIO	492	0.10	49
CTH	CATHEDRAL	684	0.10	68
FFF	FST FLR FIN	1750	1.00	1750
BMF	BSMNT FINISHED	1750	0.30	525
ATU	ATTIC	1066	0.10	107
DEK	DECK/ENTRANCE	261	0.10	26
HSU	1/2 STRY UNFIN	784	0.25	196
GAR	GARAGE	784	0.45	353
OPF	OPEN PORCH FIN	198	0.25	50
GLA:	**1,750**	**7,769**		**3,124**

2013 BASE YEAR BUILDING VALUATION

Market Cost New:		**$ 253,575**
Year Built:		**2003**
Condition For Age:	AVERAGE	**8 %**
Physical:		
Functional:		
Economic:		
Temporary:		
Total Depreciation:		**8 %**
Building Value:		**$ 233,300**

OWNER INFORMATION

RUSSMAN, RICHARD L

18 BEACH DR

KINGSTON, NH 03848

SALES HISTORY

Date	Book	Page	Type	Price	Grantor

PICTURE

LISTING HISTORY

06/01/12 KCV
04/20/04 SH V
05/13/03 BW

NOTES

VACANT. US CONSERVATION SERVICE EASEMENT (W/PART OF LOT 24A) D-36428 - V. 5122 P. 575.

EXTRA FEATURES VALUATION

Feature Type	Units	Lngth x Width	Size Adj	Rate	Cond	Market Value	Notes

MUNICIPAL SOFTWARE BY AVITAR

KINGSTON ASSESSING OFFICE

PARCEL TOTAL TAXABLE VALUE

Year	Building	Features	Land
2014	$ 0	$ 0	$ 2,225
		Parcel Total:	$ 2,225
2015	$ 0	$ 0	$ 2,042
		Parcel Total:	$ 2,042
2016	**$ 0**	**$ 0**	**$ 2,042**
		Parcel Total:	**$ 2,042**

LAND VALUATION

Zone: SFRAG SFR AGR **Minimum Acreage:** 1.84 **Minimum Frontage:** 200 **Site:** **Driveway:** **Road:**

Land Type	Units	Base Rate	NC	Adj	Site	Road	DWay	Topography	Cond	Ad Valorem	SPI	R	Tax Value	Notes
FARM LAND	4.000 ac	x 2,000	X	94	100	100	100		100	7,500	80	N	1,294	
UNMNGD PINE	5.000 ac	x 2,000	X	94					100	9,400	80	N	691	
UNPRODUCTIVE	3.370 ac	x 2,000	X	94					100	6,300	80	N	57	
	12.370 ac									23,200			**2,042**	

PICTURE

OWNER

RUSSMAN, RICHARD L

18 BEACH DR

KINGSTON, NH 03848

TAXABLE DISTRICTS

District	Percentage

PERMITS

Date	Permit ID	Permit Type	Notes

BUILDING DETAILS

Model:
Roof:
Ext:
Int:
Floor:
Heat:
Bedrooms: Baths: Fixtures:
Extra Kitchens: Fireplaces:
A/C: Generators:
Quality:
Com. Wall:
Stories:
Base Type:

BUILDING SUB AREA DETAILS

2013 BASE YEAR BUILDING VALUATION

Year Built:
Condition For Age: %
Physical:
Functional:
Economic:
Temporary:
%

OWNER INFORMATION

CARSON, WILLIAM R

103 EXETER RD

KINGSTON, NH 03848

SALES HISTORY

Date	Book	Page	Type	Price	Grantor
02/27/2007	4770	1392	U I 39		CARSON
01/03/2003	3923	2027	U I 38		CARSON

PICTURE

LISTING HISTORY

07/02/12	KCM
11/11/03	BW O
08/08/03	BW X

NOTES

CHARCOAL, CORRECT LABELING & SKETCH 7/12KC

EXTRA FEATURES VALUATION

Feature Type	Units	Lngth x Width	Size Adj	Rate	Cond	Market Value	Notes
FIREPLACE 2-1	1		100	4,000.00	100	4,000	
IN GRND POOL/VINYL	576	16 x 36	88	38.00	75	14,446	
GARAGE	1,120	40 x 28	74	30.00	60	14,918	
						33,400	

MUNICIPAL SOFTWARE BY AVITAR

KINGSTON ASSESSING OFFICE

PARCEL TOTAL TAXABLE VALUE

Year	Building	Features	Land
2014	$ 275,200	$ 33,400	$ 82,300
		Parcel Total:	$ 390,900
2015	$ 275,200	$ 33,400	$ 82,300
		Parcel Total:	$ 390,900
2016	**$ 275,200**	**$ 33,400**	**$ 82,300**
		Parcel Total:	**$ 390,900**

LAND VALUATION

Zone: SFRAG SFR AGR **Minimum Acreage:** 1.84 **Minimum Frontage:** 200 **Site:** **Driveway:** **Road:**

Land Type	Units	Base Rate	NC	Adj	Site	Road	DWay	Topography	Cond	Ad Valorem	SPI	R	Tax Value	Notes
1F RES	1.840 ac	80,000	E	100	100	100	100		100	80,000	0	N	80,000	
1F RES	1.160 ac	x 2,000	X	100					100	2,300	0	N	2,300	
	3.000 ac									82,300			**82,300**	

Map: 000R37 **Lot: 000027** **Sub: 000000** **Card: 1 of 1** **103 EXETER RD** **KINGSTON** **Printed: 07/22/2016**

PICTURE

OWNER

CARSON, WILLIAM R

103 EXETER RD

KINGSTON, NH 03848

TAXABLE DISTRICTS

District	Percentage

PERMITS

Date	Permit ID	Permit Type	Notes

BUILDING DETAILS

Model: **1.75 STORY FRAME CAPE**
Roof: **GABLE HIP/ASPHALT**
Ext: **CLAP BOARD**
Int: **DRYWALL**
Floor: **HARDWOOD/CARPET**
Heat: **OIL/HOT WATER**
Bedrooms: **3** Baths: **2.5** Fixtures:
Extra Kitchens: Fireplaces:
A/C: **No** Generators:
Quality: **A1 AVG+10**
Com. Wall:
Size Adj: **0.8623** Base Rate: **RSA 80.00**
Bldg. Rate: **0.9109**
Sq. Foot Cost: **$ 72.87**

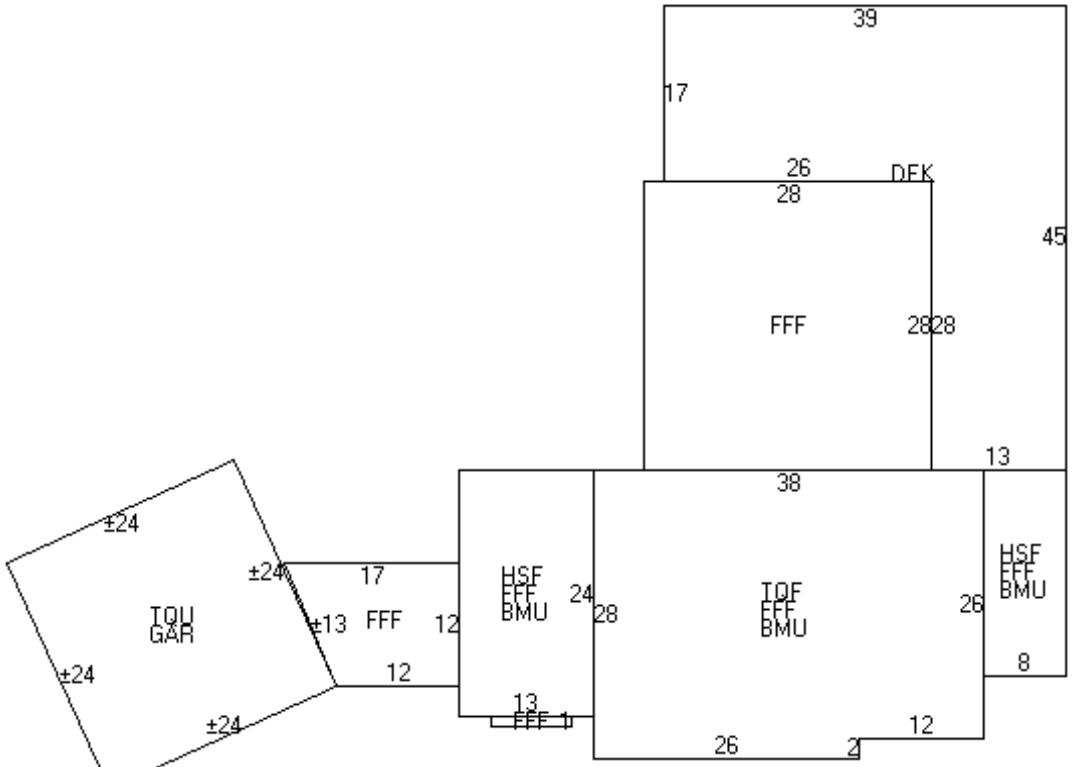

(DEK=U17R39D45L13U28L26)L2(FFF=R28D28)R13(HSF,FFF,BMU=D20L8)U20L38(TQF,FFF,BMU=R38D26L12D2L26U28)(HSF,FFF,BMU=D24L13)R11(FFF=D1L8)L3U4(FFF=U12L17[D12R5]R12)L12(TQU,GAR=[D10L22][L10U22][U10R22][R10D22])

BUILDING SUB AREA DETAILS

ID	Description	Area	Adj.	Effect.
GAR	GARAGE	584	0.45	263
DEK	DECK/ENTRANCE	1027	0.10	103
FFF	FST FLR FIN	2478	1.00	2478
HSF	1/2 STRY FIN	472	0.50	236
BMU	BSMNT	1512	0.15	227
TQF	3/4 STRY FIN	1040	0.75	780
TQU	3/4 STRY UNFIN	584	0.35	204
GLA:	**3,494**	**7,697**		**4,291**

2013 BASE YEAR BUILDING VALUATION

Market Cost New:		**$ 312,685**
Year Built:		**1990**
Condition For Age:	AVERAGE	**12 %**
Physical:		
Functional:		
Economic:		
Temporary:		
Total Depreciation:		**12 %**
Building Value:		**$ 275,200**

OWNER INFORMATION

NORTHRUP, TRESSA G

99 EXETER RD

KINGSTON, NH 03848

SALES HISTORY

Date	Book	Page	Type	Price	Grantor
11/06/2002	3878	103	Q I	199,600	SCOTT
09/24/2002	3844	1052	Q I	193,933	KNEELAND

PICTURE

LISTING HISTORY

07/02/12	KCM
03/21/08	FRO
04/20/04	SH X
08/11/03	BW O
08/08/03	BW X

NOTES

GREY, 11/02 SALE-NEW WINDOWS SINCE SALE, CHK 2004 NEW ENTRANCE. COMPLETE 2004., TQF 100% COMP 3/08FR, CORRECT SKETCH-INFO-& A/C 7/12KC

EXTRA FEATURES VALUATION

Feature Type	Units	Lngth x Width	Size Adj	Rate	Cond	Market Value	Notes
FIREPLACE 1-1	1		100	3,000.00	100	3,000	
						3,000	

MUNICIPAL SOFTWARE BY AVITAR

KINGSTON ASSESSING OFFICE

PARCEL TOTAL TAXABLE VALUE

Year	Building	Features	Land
2014	$ 119,400	$ 3,000	$ 75,800
		Parcel Total:	$ 198,200
2015	$ 119,400	$ 3,000	$ 75,800
		Parcel Total:	$ 198,200
2016	**$ 119,400**	**$ 3,000**	**$ 75,800**
		Parcel Total:	**$ 198,200**

LAND VALUATION

Zone: SFRAG SFR AGR **Minimum Acreage:** 1.84 **Minimum Frontage:** 200 **Site:** **Driveway:** **Road:**

Land Type	Units	Base Rate	NC	Adj	Site	Road	DWay	Topography	Cond	Ad Valorem	SPI	R	Tax Value	Notes
1F RES	0.800 ac	75,800	E	100	100	100	100		100	75,800	0	N	75,800	
	0.800 ac									75,800			**75,800**	

PICTURE

OWNER

NORTHRUP, TRESSA G

99 EXETER RD

KINGSTON, NH 03848

TAXABLE DISTRICTS

District	Percentage

PERMITS

Date	Permit ID	Permit Type	Notes
08/24/07	R37-28	ADDITION	ADD FULL DORMER TO EX

BUILDING DETAILS

Model: **1.50 STORY FRAME CAPE**
Roof: **GABLE HIP/ASPHALT**
Ext: **VINYL SIDING**
Int: **DRYWALL**
Floor: **PINE/SOFT WD/CARPET**
Heat: **GAS/FA DUCTED**
Bedrooms: **3** Baths: **1.0** Fixtures:
Extra Kitchens: Fireplaces:
A/C: **Yes 100.00 %** Generators:
Quality: **A0 AVG**
Com. Wall:
Size Adj: **1.0094** Base Rate: **RSA 80.00**
Bldg. Rate: **0.9793**
Sq. Foot Cost: **$ 78.35**

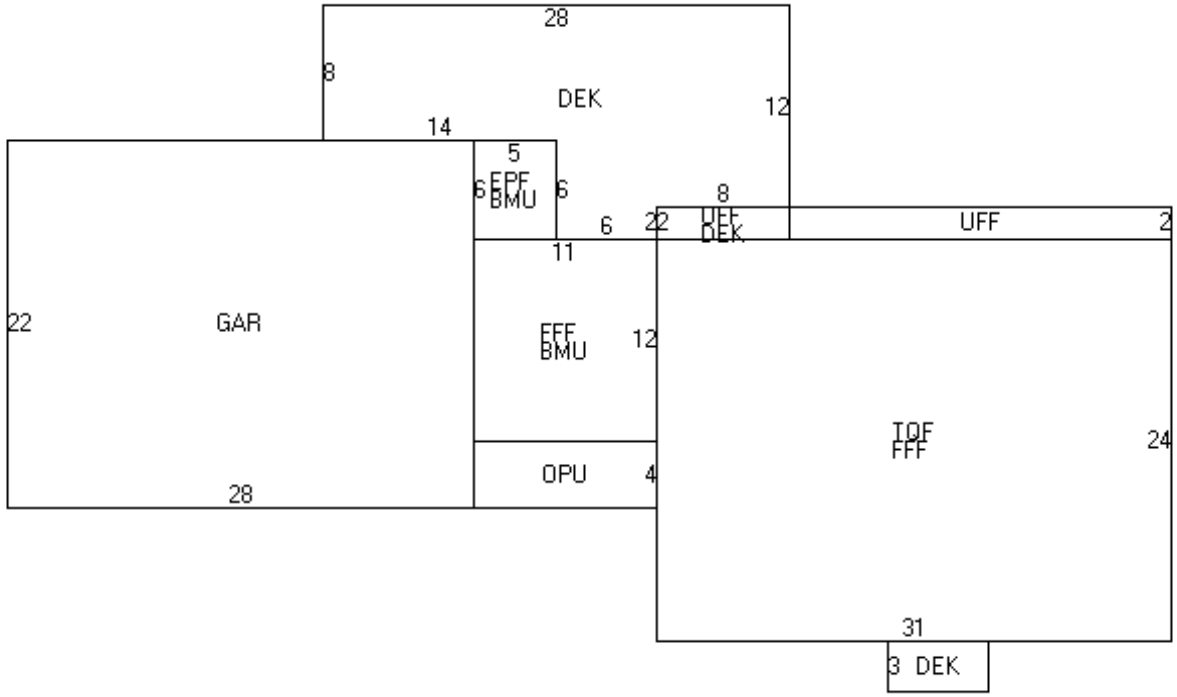

(GAR=D22R28)(OPU=R11U4)(FFF,BMU=U12L11)(EPF,BMU=U6R5)(DEK=L14U8R28D12L8D2L6U6)D6R6(UFF,DEK=U2R8)(UFF=R23D2)(TQF,FFF=D24L31)R14(DEK=D3R6)

BUILDING SUB AREA DETAILS

ID	Description	Area	Adj.	Effect.
UFF	UPPER FLR FIN	62	1.00	62
GAR	GARAGE	616	0.45	277
OPU	OPEN PORCH	44	0.15	7
FFF	FST FLR FIN	876	1.00	876
BMU	BSMNT	162	0.15	24
EPF	ENCLSD PORCH	30	0.70	21
DEK	DECK/ENTRANCE	326	0.10	33
TQF	3/4 STRY FIN	744	0.75	558
GLA:	**1,517**	**2,860**		**1,858**

2013 BASE YEAR BUILDING VALUATION

Market Cost New:		**$ 145,574**
Year Built:		**1930**
Condition For Age:	GOOD	**18 %**
Physical:		
Functional:		
Economic:		
Temporary:		
Total Depreciation:		**18 %**
Building Value:		**$ 119,400**

OWNER INFORMATION

VERRILL, DANIEL
VERRILL, PAMELA C
P. O. BOX 188

KINGSTON, NH 03848-0188

SALES HISTORY

Date	Book	Page	Type	Price	Grantor

PICTURE

LISTING HISTORY

06/27/12 KCM
02/27/09 FRR
04/16/08 KCX
05/12/03 BW

NOTES

CREAM, JACUZZI, CHK 09 FOR RE-ROOFED GAR 4/08KC. NOH EST 100% REROOF FRR 3/09

EXTRA FEATURES VALUATION

Feature Type	Units	Lngth x Width	Size Adj	Rate	Cond	Market Value	Notes
FIREPLACE 1-1	2		100	3,000.00	100	6,000	
OPEN PORCH	256		123	12.50	100	3,936	
IN GRND POOL/VINYL	512	32 x 16	91	38.00	70	12,393	
						22,300	

MUNICIPAL SOFTWARE BY AVITAR

KINGSTON ASSESSING OFFICE

PARCEL TOTAL TAXABLE VALUE

Year	Building	Features	Land
2014	$ 313,700	$ 22,300	$ 80,300
		Parcel Total:	$ 416,300
2015	$ 313,700	$ 22,300	$ 80,300
		Parcel Total:	$ 416,300
2016	**$ 313,700**	**$ 22,300**	**$ 80,300**
		Parcel Total:	**$ 416,300**

LAND VALUATION

Zone: SFRAG SFR AGR **Minimum Acreage:** 1.84 **Minimum Frontage:** 200 **Site:** **Driveway:** **Road:**

Land Type	Units	Base Rate	NC	Adj	Site	Road	DWay	Topography	Cond	Ad Valorem	SPI	R	Tax Value	Notes
1F RES	1.840 ac	80,000	E	100	100	100	100		100	80,000	0	N	80,000	
1F RES	0.160 ac	x 2,000	X	100					100	300	0	N	300	
	2.000 ac									80,300			**80,300**	

Map: 000R37 **Lot: 00005A** **Sub: 000000** **Card: 1 of 1** **118 EXETER RD** **KINGSTON** **Printed: 07/22/2016**

PICTURE

OWNER

VERRILL, DANIEL
VERRILL, PAMELA C
P. O. BOX 188

KINGSTON, NH 03848-0188

TAXABLE DISTRICTS

District	Percentage

PERMITS

Date	Permit ID	Permit Type	Notes
02/16/16	R37-5A	ELECTRIC PERMIT	REPAIR DAMAGED SRVICE
07/12/07	R37-5A	ALTERATION	REPAIR EXISTING GARAGE

BUILDING DETAILS

Model: **1.00 STORY FRAME RANCH**
Roof: **GABLE HIP/ASPHALT**
Ext: **VINYL SIDING**
Int: **DRYWALL**
Floor: **PINE/SOFT WD/HARDWOOD**
Heat: **OIL/HOT WATER**
Bedrooms: **3** Baths: **2.0** Fixtures:
Extra Kitchens: Fireplaces:
A/C: **No** Generators:
Quality: **A2 AVG+20**
Com. Wall:
Size Adj: **0.8593** Base Rate: **RSA 80.00**
Bldg. Rate: **1.0105**
Sq. Foot Cost: **$ 80.84**

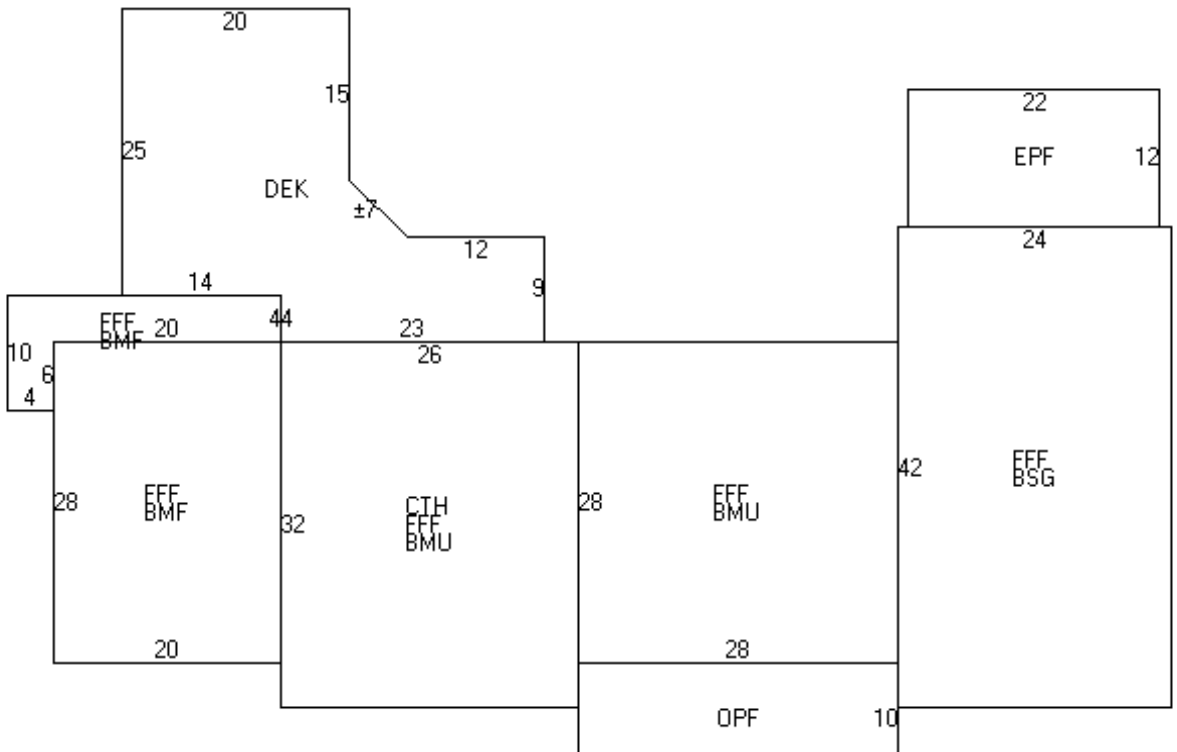

(DEK=U25R20D15[R5D5]R12D9L23U4L14)L10(FFF,BMF=R24D4L20D6L4U10)D10R4U6(FFF,BMF=D28R20)D4(CTH,FFF,BMU=U32R26)(FFF,BMU=D28R28)(OPF=D10L28)R28U6(FFF,BSG=U42R24)L1(EPF=U12L22)

BUILDING SUB AREA DETAILS

ID	Description	Area	Adj.	Effect.
DEK	DECK/ENTRANCE	690	0.10	69
FFF	FST FLR FIN	3304	1.00	3304
BMF	BSMNT FINISHED	680	0.30	204
CTH	CATHEDRAL	832	0.10	83
BMU	BSMNT	1616	0.15	242
OPF	OPEN PORCH FIN	280	0.25	70
BSG	BSMT GAR	1008	0.25	252
EPF	ENCLSD PORCH	264	0.70	185
GLA:	**3,489**	**8,674**		**4,409**

2013 BASE YEAR BUILDING VALUATION

Market Cost New:		**$ 356,424**
Year Built:		**1977**
Condition For Age:	GOOD	**12 %**
Physical:		
Functional:		
Economic:		
Temporary:		
Total Depreciation:		**12 %**
Building Value:		**$ 313,700**

OWNER INFORMATION

RUSSMAN, RICHARD L

18 BEACH DR

KINGSTON, NH 03848

SALES HISTORY

Date	Book	Page	Type	Price	Grantor
10/05/1984	2514	1530	U I 38		RUSSMAN, ADELE G

PICTURE

LISTING HISTORY

06/01/12 KCV
05/13/03 BW

NOTES

VACANT. US CONSERVATION SERVICE EASEMENT ON 6.63 ACRES (W/LOT 26) - PLAN D-36428 - V. 5122 P. 575. ADDITIONAL EASEMENT TO SELT 12/10 BY RCRD 5181-1483.

EXTRA FEATURES VALUATION

Feature Type	Units	Lngth x Width	Size Adj	Rate	Cond	Market Value	Notes

MUNICIPAL SOFTWARE BY AVITAR

KINGSTON ASSESSING OFFICE

PARCEL TOTAL TAXABLE VALUE

Year	Building	Features	Land
2014	$ 0	$ 0	$ 614
		Parcel Total:	$ 614
2015	$ 0	$ 0	$ 564
		Parcel Total:	$ 564
2016	**$ 0**	**$ 0**	**$ 564**
		Parcel Total:	**$ 564**

LAND VALUATION

Zone: SFRAG SFR AGR **Minimum Acreage:** 1.84 **Minimum Frontage:** 200 **Site:** **Driveway:** **Road:**

Land Type	Units	Base Rate	NC	Adj	Site	Road	DWay	Topography	Cond	Ad Valorem	SPI	R	Tax Value	Notes
UNMNGD OTHER	5.370 ac	x 2,000	X	92	100	100	100		100	9,900	80	N	212	
UNPRODUCTIVE	200.000 ff	x 100	E	100					100	20,000	0	N	0	
UNPRODUCTIVE	4.240 ac	x 2,000	X	92					100	7,800	80	N	72	5181-1483
UNMNGD OTHER	6.630 ac	x 2,000	X	92					100	12,200	100	N	280	D-36428
	16.240 ac									49,900			**564**	

PICTURE

OWNER

RUSSMAN, RICHARD L

18 BEACH DR

KINGSTON, NH 03848

TAXABLE DISTRICTS

District	Percentage

PERMITS

Date	Permit ID	Permit Type	Notes

BUILDING DETAILS

Model:
Roof:
Ext:
Int:
Floor:
Heat:
Bedrooms: Baths: Fixtures:
Extra Kitchens: Fireplaces:
A/C: Generators:
Quality:
Com. Wall:
Stories:
Base Type:

BUILDING SUB AREA DETAILS

2013 BASE YEAR BUILDING VALUATION

Year Built:
Condition For Age: %
Physical:
Functional:
Economic:
Temporary:
%

OWNER INFORMATION

OSBORNE, DEREK

68 EXETER ROAD

KINGSTON, NH 03848

SALES HISTORY

Date	Book	Page	Type	Price	Grantor
06/14/2016	5723	0952	Q I	264,000	BRICKETT, RONALD A
08/30/1982	2420	1559	U I 82		BOURGELAIS, FREDERICK N

PICTURE

LISTING HISTORY

07/02/12	KCML	CHNG ROOF & LABELING
05/15/03	BW O	

NOTES

CREAM.

EXTRA FEATURES VALUATION

Feature Type	Units	Lngth x Width	Size Adj	Rate	Cond	Market Value	Notes

MUNICIPAL SOFTWARE BY AVITAR

KINGSTON ASSESSING OFFICE

PARCEL TOTAL TAXABLE VALUE

Year	Building	Features	Land
2014	$ 118,800	$ 0	$ 71,000
		Parcel Total:	$ 189,800
2015	$ 118,800	$ 0	$ 71,000
		Parcel Total:	$ 189,800
2016	**$ 118,800**	**$ 0**	**$ 71,000**
		Parcel Total:	**$ 189,800**

LAND VALUATION

Zone: SFRAG SFR AGR **Minimum Acreage:** 1.84 **Minimum Frontage:** 200 **Site:** **Driveway:** **Road:**

Land Type	Units	Base Rate	NC	Adj	Site	Road	DWay	Topography	Cond	Ad Valorem	SPI	R	Tax Value	Notes
1F RES	0.400 ac	70,950	E	100	100	100	100		100	71,000	0	N	71,000	
	0.400 ac									71,000			**71,000**	

Map: 000R38 **Lot: 000001** **Sub: 000000** **Card: 1 of 1** **68 EXETER RD** **KINGSTON** **Printed: 07/22/2016**

PICTURE

OWNER

OSBORNE, DEREK

68 EXETER ROAD

KINGSTON, NH 03848

TAXABLE DISTRICTS

District	Percentage

PERMITS

Date	Permit ID	Permit Type	Notes

BUILDING DETAILS

Model: **1.00 STORY FRAME R. RANCH**
Roof: **GABLE HIP/METAL/TIN**
Ext: **VINYL SIDING**
Int: **DRYWALL**
Floor: **CARPET**
Heat: **OIL/HOT WATER**
Bedrooms: **3** Baths: **1.5** Fixtures:
Extra Kitchens: Fireplaces:
A/C: **No** Generators:
Quality: **A0 AVG**
Com. Wall:
Size Adj: **1.0288** Base Rate: **RSA 80.00**
Bldg. Rate: **0.9876**
Sq. Foot Cost: **$ 79.01**

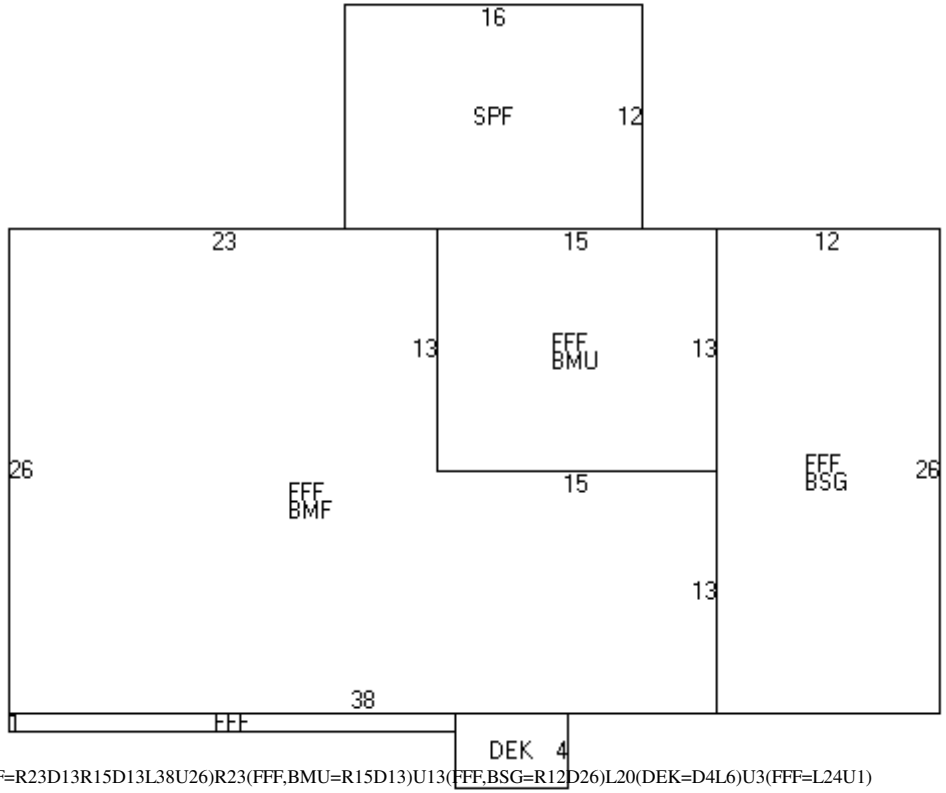

(SPF=R16D12)L34(FFF,BMF=R23D13R15D13L38U26)R23(FFF,BMU=R15D13)U13(FFF,BSG=R12D26)L20(DEK=D4L6)U3(FFF=L24U1)

BUILDING SUB AREA DETAILS

ID	Description	Area	Adj.	Effect.
SPF	SCREEN PORCH	192	0.30	58
FFF	FST FLR FIN	1324	1.00	1324
BMF	BSMNT FINISHED	793	0.30	238
BMU	BSMNT	195	0.15	29
BSG	BSMT GAR	312	0.25	78
DEK	DECK/ENTRANCE	24	0.10	2
GLA:	**1,324**	**2,840**		**1,729**

2013 BASE YEAR BUILDING VALUATION

Market Cost New:		**$ 136,608**
Year Built:		**1973**
Condition For Age:	GOOD	**13 %**
Physical:		
Functional:		
Economic:		
Temporary:		
Total Depreciation:		**13 %**
Building Value:		**$ 118,800**

OWNER INFORMATION

LEONE, JACQUELYNN BARBARA

70 EXETER ROAD

KINGSTON, NH 03848

SALES HISTORY

Date	Book	Page	Type	Price	Grantor
05/05/2015	5615	0729	U I 39	134,500	SWEET, KENNETH CARL
05/30/2014	5533	2925	U I 51	171,000	US HOUSING & URBAN
06/12/2013	5448	2053	U I 51	342,000	DODGE, TREVOR E.
06/12/2013	5448	2058	U I 51		WELLS FARGO BANK
05/02/2008	4913	1374	Q I	347,000	DALY

PICTURE

LISTING HISTORY

07/02/12	KCM	CHNG COND & SKETCH LAB
04/04/08	FRO	BSMNT IS UNFIN
08/05/03	BW X	

NOTES

YELLOW.

EXTRA FEATURES VALUATION

Feature Type	Units	Lngth x Width	Size Adj	Rate	Cond	Market Value	Notes
FIREPLACE 1-1	1		100	3,000.00	100	3,000	
BARN /LOFT	552	24 x 23	89	18.00	60	5,306	
SHED-WOOD	140	14 x 10	174	10.00	60	1,462	
DECK DETACHED	56	4 x 14	346	10.00	50	969	
						10,700	

MUNICIPAL SOFTWARE BY AVITAR

KINGSTON ASSESSING OFFICE

PARCEL TOTAL TAXABLE VALUE

Year	Building	Features	Land
2014	$ 210,200	$ 10,700	$ 78,200
		Parcel Total:	$ 299,100
2015	$ 210,200	$ 10,700	$ 78,200
		Parcel Total:	$ 299,100
2016	**$ 210,200**	**$ 10,700**	**$ 78,200**
		Parcel Total:	**$ 299,100**

LAND VALUATION

Zone: SFRAG SFR AGR **Minimum Acreage:** 1.84 **Minimum Frontage:** 200 **Site:** **Driveway:** **Road:**

Land Type	Units	Base Rate	NC	Adj	Site	Road	DWay	Topography	Cond	Ad Valorem	SPI	R	Tax Value	Notes
1F RES	1.300 ac	78,170	E	100	100	100	100		100	78,200	0	N	78,200	
	1.300 ac									78,200			**78,200**	

Map: 000R38 **Lot: 000002** **Sub: 000000** **Card: 1 of 1** **70 EXETER RD** **KINGSTON** **Printed: 07/22/2016**

PICTURE

OWNER

LEONE, JACQUELYNN BARBARA

70 EXETER ROAD

KINGSTON, NH 03848

TAXABLE DISTRICTS

District	Percentage

PERMITS

Date	Permit ID	Permit Type	Notes

BUILDING DETAILS

Model: **2.00 STORY FRAME CONVENTION**
Roof: **GABLE HIP/ASPHALT**
Ext: **CLAP BOARD**
Int: **DRYWALL**
Floor: **PINE/SOFT WD/CARPET**
Heat: **OIL/HOT WATER**
Bedrooms: **3** Baths: **2.0** Fixtures:
Extra Kitchens: Fireplaces:
A/C: **No** Generators:
Quality: **A2 AVG+20**
Com. Wall:
Size Adj: **0.9146** Base Rate: **RSA 80.00**
Bldg. Rate: **1.0433**
Sq. Foot Cost: **$ 83.46**

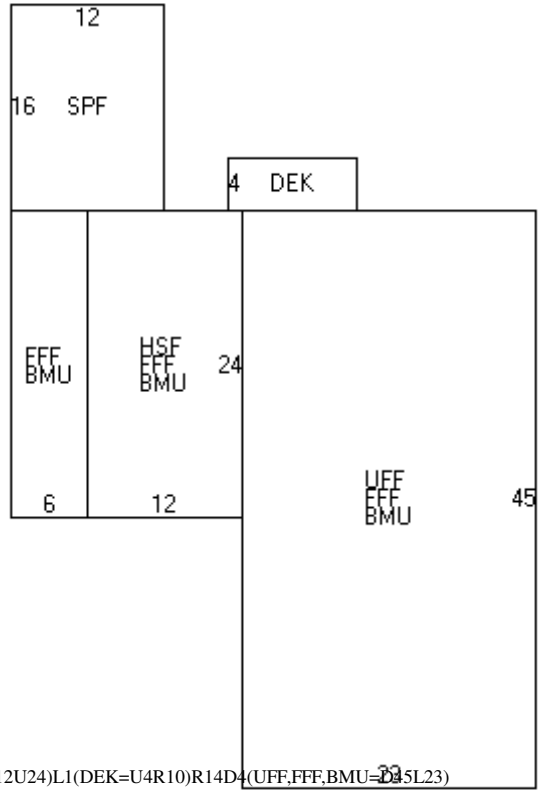

(SPF=L12D16)(FFF,BMU=D24R6)(HSF,FFF,BMU=R12U24)L1(DEK=U4R10)R14D4(UFF,FFF,BMU=D45L23)

BUILDING SUB AREA DETAILS

ID	Description	Area	Adj.	Effect.
SPF	SCREEN PORCH	192	0.30	58
FFF	FST FLR FIN	1467	1.00	1467
BMU	BSMNT	1467	0.15	220
HSF	1/2 STRY FIN	288	0.50	144
DEK	DECK/ENTRANCE	40	0.10	4
UFF	UPPER FLR FIN	1035	1.00	1035
GLA:	**2,646**	**4,489**		**2,928**

2013 BASE YEAR BUILDING VALUATION

Market Cost New:		**$ 244,371**
Year Built:		**1980**
Condition For Age:	AVERAGE	**14 %**
Physical:		
Functional:		
Economic:		
Temporary:		
Total Depreciation:		**14 %**
Building Value:		**$ 210,200**

OWNER INFORMATION

IVETT, JOHN W.

76 EXETER ROAD

KINGTON, NH 03848

SALES HISTORY

Date	Book	Page	Type	Price	Grantor
11/20/2013	5496	0193	U I 81	165,000	WOODBURY, BARBARA F (H
07/21/1960	1553	301	U I 82		WOODBURY, CHESTER
10/09/1947	1080	0132	U I 82		STEEVES, HOWARD W.

PICTURE

LISTING HISTORY

07/02/12	KCM	ADD OPU & CHNG SIDING
05/15/03	BW O	LIST FOR REVAL

NOTES

WHITE, D-12907.

EXTRA FEATURES VALUATION

Feature Type	Units	Lngth x Width	Size Adj	Rate	Cond	Market Value	Notes
IN GRND POOL/VINYL	512	32 x 16	91	38.00	50	8,852	
SHED-WOOD	160	10 x 16	160	10.00	70	1,792	
BARN /LOFT	2,160	60 x 36	67	18.00	70	18,235	
						28,900	

MUNICIPAL SOFTWARE BY AVITAR

KINGSTON ASSESSING OFFICE

PARCEL TOTAL TAXABLE VALUE

Year	Building	Features	Land
2014	$ 70,100	$ 28,900	$ 80,000
		Parcel Total:	$ 179,000
2015	$ 70,100	$ 28,900	$ 80,000
		Parcel Total:	$ 179,000
2016	**$ 70,100**	**$ 28,900**	**$ 80,000**
		Parcel Total:	**$ 179,000**

LAND VALUATION

Zone: SFRAG SFR AGR **Minimum Acreage:** 1.84 **Minimum Frontage:** 200 **Site:** **Driveway:** **Road:**

Land Type	Units	Base Rate	NC	Adj	Site	Road	DWay	Topography	Cond	Ad Valorem	SPI	R	Tax Value	Notes
1F RES	1.840 ac	80,000	E	100	100	100	100		100	80,000	0	N	80,000	
	1.840 ac									80,000			**80,000**	

Map: 000R38 **Lot: 000003** **Sub: 000000** **Card: 1 of 1** **76 EXETER RD** **KINGSTON** **Printed: 07/22/2016**

PICTURE

OWNER

IVETT, JOHN W.

76 EXETER ROAD

KINGTON, NH 03848

TAXABLE DISTRICTS

District	Percentage

PERMITS

Date	Permit ID	Permit Type	Notes

BUILDING DETAILS

Model: **1.00 STORY FRAME RANCH**
Roof: **GABLE HIP/ASPHALT**
Ext: **VINYL SIDING**
Int: **DRYWALL/WALL BOARD**
Floor: **CARPET**
Heat: **OIL/FA DUCTED**
Bedrooms: **2** Baths: **1.0** Fixtures:
Extra Kitchens: Fireplaces:
A/C: **No** Generators:
Quality: **B1 AVG-10**
Com. Wall:
Size Adj: **1.1547** Base Rate: **RSA 80.00**
Bldg. Rate: **0.9561**
Sq. Foot Cost: **$ 76.49**

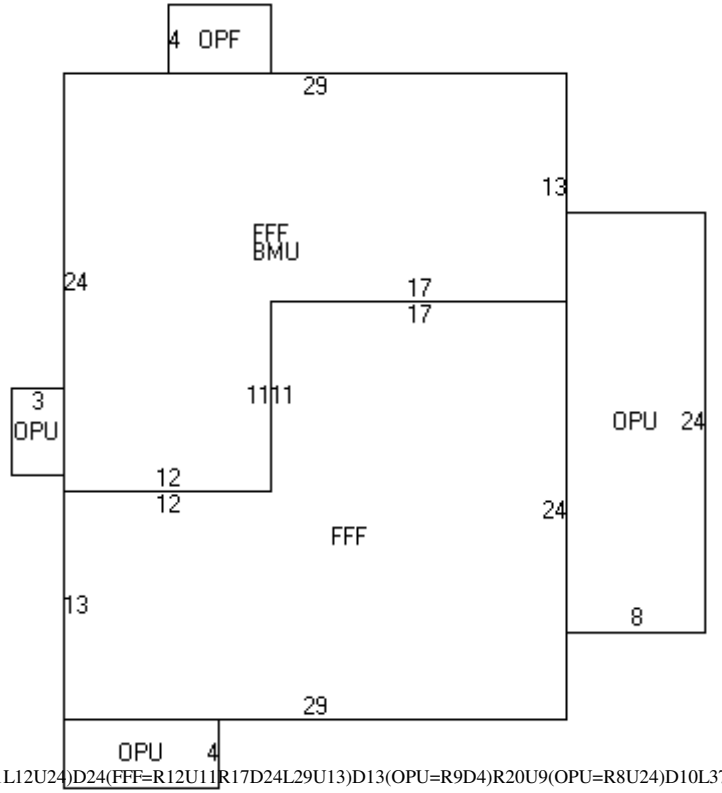

(OPF=L6D4)L6(FFF,BMU=R29D13L17D11L12U24)D24(FFF=R12U11R17D24L29U13)D13(OPU=R9D4)R20U9(OPU=R8U24)D10L37(OPU=L3D5)

BUILDING SUB AREA DETAILS

ID	Description	Area	Adj.	Effect.
OPF	OPEN PORCH FIN	24	0.25	6
FFF	FST FLR FIN	1073	1.00	1073
BMU	BSMNT	509	0.15	76
OPU	OPEN PORCH	243	0.15	36
GLA:	**1,073**	**1,849**		**1,191**

2013 BASE YEAR BUILDING VALUATION

Market Cost New:		**$ 91,100**
Year Built:		**1929**
Condition For Age:	AVERAGE	**23 %**
Physical:		
Functional:		
Economic:		
Temporary:		
Total Depreciation:		**23 %**
Building Value:		**$ 70,100**

OWNER INFORMATION

DURKEE, GERALDINE F

80 EXETER RD

KINGSTON, NH 03848-3113

SALES HISTORY

Date	Book	Page	Type	Price	Grantor

PICTURE

LISTING HISTORY

07/02/12 KCM
05/15/03 BW O

NOTES

WHITE / RED, CORRECT SKETCH & EXTRA FEATURES 7/12KC

EXTRA FEATURES VALUATION

Feature Type	Units	Lngth x Width	Size Adj	Rate	Cond	Market Value	Notes
FIREPLACE 1-1	1		100	3,000.00	100	3,000	
BARN /LOFT	1,080	30 x 36	75	18.00	65	9,477	
						12,500	

MUNICIPAL SOFTWARE BY AVITAR

KINGSTON ASSESSING OFFICE

PARCEL TOTAL TAXABLE VALUE

Year	Building	Features	Land
2014	$ 167,800	$ 12,500	$ 99,900
		Parcel Total:	$ 280,200
2015	$ 167,800	$ 12,500	$ 99,900
		Parcel Total:	$ 280,200
2016	**$ 167,800**	**$ 12,500**	**$ 99,900**
		Parcel Total:	**$ 280,200**

LAND VALUATION

Zone: SFRAG SFR AGR **Minimum Acreage:** 1.84 **Minimum Frontage:** 200 **Site:** **Driveway:** **Road:**

Land Type	Units	Base Rate	NC	Adj	Site	Road	DWay	Topography	Cond	Ad Valorem	SPI	R	Tax Value	Notes
1F RES	1.840 ac	80,000	E	100	100	100	100		100	80,000	0	N	80,000	
1F RES	10.560 ac	x 2,000	X	94					100	19,900	0	N	19,900	
	12.400 ac									99,900			**99,900**	

Map: 000R38 **Lot: 000004** **Sub: 000000** **Card: 1 of 1** **80 EXETER RD** **KINGSTON** **Printed: 07/22/2016**

PICTURE

OWNER

DURKEE, GERALDINE F

80 EXETER RD

KINGSTON, NH 03848-3113

TAXABLE DISTRICTS

District	Percentage

PERMITS

Date	Permit ID	Permit Type	Notes

BUILDING DETAILS

Model: **1.00 STORY FRAME R. RANCH**
Roof: **GABLE HIP/ASPHALT**
Ext: **VINYL SIDING/AVERAGE**
Int: **DRYWALL/WALL BOARD**
Floor: **CARPET/HARDWOOD**
Heat: **GAS/FA DUCTED**
Bedrooms: **4** Baths: **2.0** Fixtures:
Extra Kitchens: Fireplaces:
A/C: **No** Generators:
Quality: **A1 AVG+10**
Com. Wall:
Size Adj: **0.9446** Base Rate: **RSA 80.00**
Bldg. Rate: **1.0079**
Sq. Foot Cost: **$ 80.63**

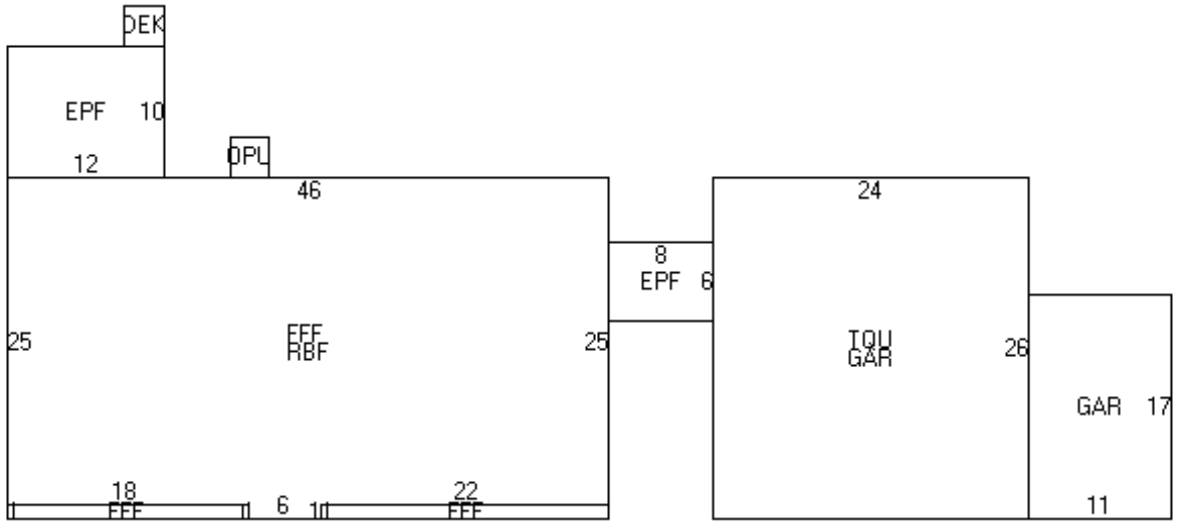

(DEK=R3D3)(EPF=D10L12)(FFF,RBF=R46D25L22D1L6U1L18U25)R17(OPU=R3U3)R26D8(EPF=R8D6)U11(TQU,GAR=R24D26)(GAR=R11U17)D16L43(FFF=L22D1)L6(FFF=L18U1)

BUILDING SUB AREA DETAILS

ID	Description	Area	Adj.	Effect.
DEK	DECK/ENTRANCE	9	0.10	1
EPF	ENCLSD PORCH	168	0.70	118
FFF	FST FLR FIN	1196	1.00	1196
RBF	RAISED BSMNT	1156	0.50	578
OPU	OPEN PORCH	9	0.15	1
TQU	3/4 STRY UNFIN	624	0.35	218
GAR	GARAGE	811	0.45	365
GLA:	**1,892**	**3,973**		**2,477**

2013 BASE YEAR BUILDING VALUATION

Market Cost New:		**$ 199,721**
Year Built:		**1970**
Condition For Age:	AVERAGE	**16 %**
Physical:		
Functional:		
Economic:		
Temporary:		
Total Depreciation:		**16 %**
Building Value:		**$ 167,800**

OWNER INFORMATION

MORELAND, DAVID S
MORELAND, MARY A
82 EXETER RD

KINGSTON, NH 03848-3113

SALES HISTORY

Date	Book	Page	Type	Price	Grantor
12/19/2014	5580	2800	U I 38		MORELAND, DAVID S
12/23/1958	1681	241	U I 82		SWASEY, JOHN F
01/01/1906	614	294	U I 82		ROBINSON, BESSIE J

PICTURE

LISTING HISTORY

07/02/12 KCM
05/15/03 BW O

NOTES

BROWN,THERE IS A MECHANICAL SHOP IN GARAGE, THIS LAND IS MIXED USE. CARPORT AND STORAGE TRAILOR IS N/V. CHNG ROOF 7/12KC

EXTRA FEATURES VALUATION

Feature Type	Units	Lngth x Width	Size Adj	Rate	Cond	Market Value	Notes
SHED-WOOD	80	10 x 8	260	10.00	50	1,040	
GARAGE	800	20 x 40	80	30.00	80	15,360	
GARAGE	504	14 x 36	92	30.00	80	11,128	
						27,500	

MUNICIPAL SOFTWARE BY AVITAR.

KINGSTON ASSESSING OFFICE

PARCEL TOTAL TAXABLE VALUE

Year	Building	Features	Land
2014	$ 124,600	$ 27,500	$ 81,921
		Parcel Total:	$ 234,021
2015	$ 124,600	$ 27,500	$ 81,788
		Parcel Total:	$ 233,888
2016	**$ 124,600**	**$ 27,500**	**$ 81,788**
		Parcel Total:	**$ 233,888**

LAND VALUATION

Zone: SFRAG SFR AGR **Minimum Acreage:** 1.84 **Minimum Frontage:** 200 **Site:** **Driveway:** **Road:**

Land Type	Units	Base Rate	NC	Adj	Site	Road	DWay	Topography	Cond	Ad Valorem	SPI	R	Tax Value	Notes
1F RES	1.840 ac	80,000	E	100	100	100	100		100	80,000	0	N	80,000	
1F RES	0.160 ac	x 2,000	X	88					100	300	0	N	300	
UNMNGD HARDWD	26.000 ac	x 2,000	X	88					100	45,800	100	N	1,488	
	28.000 ac									126,100			**81,788**	

Map: 000R38 **Lot: 000005** **Sub: 000000** **Card: 1 of 1** **82 EXETER RD** **KINGSTON** **Printed: 07/22/2016**

PICTURE

OWNER

MORELAND, DAVID S
MORELAND, MARY A
82 EXETER RD

KINGSTON, NH 03848-3113

TAXABLE DISTRICTS

District	Percentage

PERMITS

Date	Permit ID	Permit Type	Notes

BUILDING DETAILS

Model: **1.00 STORY FRAME RANCH**
Roof: **GABLE HIP/METAL/TIN**
Ext: **LOGS**
Int: **CUSTOM WOOD**
Floor: **PINE/SOFT WD**
Heat: **OIL/HOT WATER**
Bedrooms: **3** Baths: **1.0** Fixtures:
Extra Kitchens: Fireplaces:
A/C: **No** Generators:
Quality: **A0 AVG**
Com. Wall:
Size Adj: **1.0038** Base Rate: **RSA 80.00**
Bldg. Rate: **0.9536**
Sq. Foot Cost: **$ 76.29**

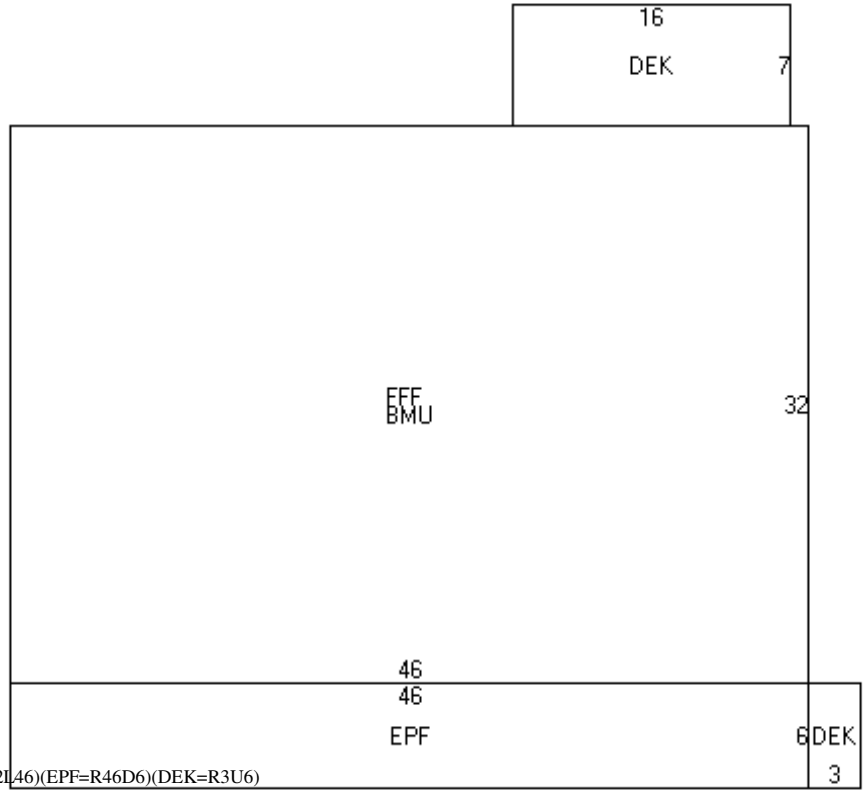

(DEK=R16D7)R1(FFF,BMU=D32L46)(EPF=R46D6)(DEK=R3U6)

BUILDING SUB AREA DETAILS

ID	Description	Area	Adj.	Effect.
DEK	DECK/ENTRANCE	130	0.10	13
FFF	FST FLR FIN	1472	1.00	1472
BMU	BSMNT	1472	0.15	221
EPF	ENCLSD PORCH	276	0.70	193
GLA:	**1,665**	**3,350**		**1,899**

2013 BASE YEAR BUILDING VALUATION

Market Cost New:		**$ 144,875**
Year Built:		**1981**
Condition For Age:	AVERAGE	**14 %**
Physical:		
Functional:		
Economic:		
Temporary:		
Total Depreciation:		**14 %**
Building Value:		**$ 124,600**

OWNER INFORMATION

GILMAN, L.R.,JR. & MABECK, K.
THE RED GATE REALTY TRUST
96 EXETER RD

KINGSTON, NH 03848-3151

SALES HISTORY

Date	Book	Page	Type	Price	Grantor
07/13/2005	4512	2686	U I 38		L. ROBERT GIMAN
07/13/2005	4512	2684	U I 38		L.R. GILMAN & MABACK

PICTURE

LISTING HISTORY

03/18/15	KCPU
03/18/13	KCPU
07/03/12	KCM
03/22/12	KCPU
05/16/03	BW O

NOTES

WHITE, NEEDS NEW SIDING 2 WALLS / SILL ROT, ADJ SKETCH FOR GAR & EPF CHK 2013 FOR COMP 3.12KC, CHK 2014 FOR ADDITION COMP ADJ % COMP 3/13KC, PU COMP REMOVE UC 3/15KC

EXTRA FEATURES VALUATION

Feature Type	Units	Lngth x Width	Size Adj	Rate	Cond	Market Value	Notes
FIREPLACE 1-1	1		100	3,000.00	100	3,000	
FIREPLACE 1-1	1		100	3,000.00	100	3,000	
SHED-WOOD	1,200	60 x 20	73	10.00	40	3,504	
SHED-WOOD	64	8 x 8	310	10.00	50	992	
SHED-WOOD	336	24 x 14	108	10.00	70	2,540	
SCREENHOUSE	96	12 x 8	227	13.50	70	2,059	
IN GRND POOL/VINYL	576	36 x 16	88	38.00	80	15,409	
						30,500	

MUNICIPAL SOFTWARE BY AVITAR

KINGSTON ASSESSING OFFICE

PARCEL TOTAL TAXABLE VALUE

Year	Building	Features	Land
2014	$ 204,600	$ 30,500	$ 90,728
		Parcel Total:	$ 325,828
2015	$ 213,000	$ 30,500	$ 90,660
		Parcel Total:	$ 334,160
2016	**$ 213,000**	**$ 30,500**	**$ 90,660**
		Parcel Total:	**$ 334,160**

LAND VALUATION

Zone: SFRAG SFR AGR **Minimum Acreage:** 1.84 **Minimum Frontage:** 200 **Site:** **Driveway:** **Road:**

Land Type	Units	Base Rate	NC	Adj	Site	Road	DWay	Topography	Cond	Ad Valorem	SPI	R	Tax Value	Notes
1F RES	1.000 ac	77,000	E	100	100	100	100		100	77,000	0	N	77,000	
1F RES	7.330 ac	x 2,000	X	88					100	12,900	0	N	12,900	
UNMNGD OTHER	18.000 ac	x 2,000	X	88					100	31,700	100	N	760	
	26.330 ac									121,600			**90,660**	

Map: 000R38 **Lot: 000007** **Sub: 000001** **Card: 1 of 1** **96 EXETER RD** **KINGSTON** **Printed: 07/22/2016**

PICTURE

OWNER

GILMAN, L.R.,JR. & MABECK, K.
THE RED GATE REALTY TRUST
96 EXETER RD

KINGSTON, NH 03848-3151

TAXABLE DISTRICTS

District	Percentage

PERMITS

Date	Permit ID	Permit Type	Notes
09/14/12	R38-7-1	ELECTRIC PERMIT	WIRE NEW ADDITION
11/15/11	R38-7-1	ADDITION	ATTACH MUD ROOM AND
09/15/11	CA20111054	SEPTIC	APPROVAL FOR OPERATIC
07/26/11	CA20111054	SEPTIC	APPROVAL FOR CONSTRU(
07/12/11	5229-0609	WELL	WELL RADIUS RELEASE

BUILDING DETAILS

Model: **2.50 STORY FRAME COLONIAL**
Roof: **GABLE HIP/ASPHALT**
Ext: **CLAP BOARD**
Int: **PLASTERED**
Floor: **CARPET/PINE/SOFT WD**
Heat: **OIL/FA DUCTED**
Bedrooms: **4** Baths: **2.0** Fixtures:
Extra Kitchens: Fireplaces:
A/C: **No** Generators:
Quality: **A4 EXC**
Com. Wall:
Size Adj: **0.8743** Base Rate: **RSA 80.00**
Bldg. Rate: **1.1636**
Sq. Foot Cost: **$ 93.08**

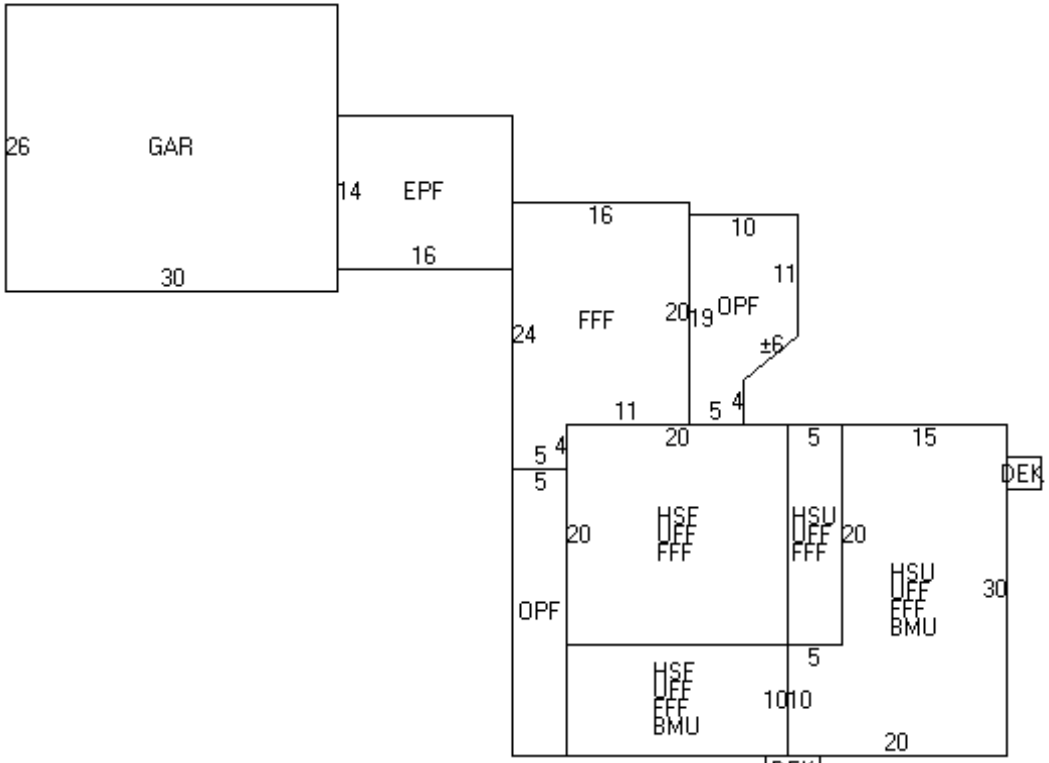

(FFF=R16D20L11D4L5U24)D24(OPF=R5D26)(HSF,UFF,FFF,BMU=R20U10)(HSU,UFF,FFF,BMU=R5U20R15D30L20U16)(HSU,UFF,FFF=U20R5)L5(HSF,UFF,FFF=L20D20)D10R18(DEK=R5D3)R17U27(DEK=R3U3)U3L27(OPF=U4[U4R5]U11L10D19R5)L21U14(EPF=L16U14)D16(GAR=L30U26)

BUILDING SUB AREA DETAILS

ID	Description	Area	Adj.	Effect.
FFF	FST FLR FIN	1540	1.00	1540
OPF	OPEN PORCH FIN	290	0.25	73
HSF	1/2 STRY FIN	600	0.50	300
UFF	UPPER FLR FIN	1200	1.00	1200
BMU	BSMNT	700	0.15	105
HSU	1/2 STRY UNFIN	600	0.25	150
DEK	DECK/ENTRANCE	24	0.10	2
EPF	ENCLSD PORCH	224	0.70	157
GAR	GARAGE	780	0.45	351
GLA:	**3,197**	**5,958**		**3,878**

2013 BASE YEAR BUILDING VALUATION

Market Cost New:		**$ 360,964**
Year Built:		**1740**
Condition For Age:	AVERAGE	**41 %**
Physical:		
Functional:		
Economic:		
Temporary:		
Total Depreciation:		**41 %**
Building Value:		**$ 213,000**

OWNER INFORMATION

GRANDE, ANTHONY L

98 EXETER ROAD

KINGSTON, NH 03848

SALES HISTORY

Date	Book	Page	Type	Price	Grantor
12/02/2014	5579	0573	Q I	245,000	GRANT, WILMON F - TRST
06/20/2013	5451	2067	U I 38		GRANT, WILMON F
06/30/1999	3403	2473	U I 38	137,000	STEVENS

PICTURE

LISTING HISTORY

07/03/12	KCML	CORRECT SKETCH & INFO
04/20/04	SH X	COMPLETE 2004
05/16/03	BW O	CHECK 2004 FOR TRIM / PAI

NOTES

D-24927. WHITE,. 3/05 REMOVE TEMP DEPR-BW.

EXTRA FEATURES VALUATION

Feature Type	Units	Lngth x Width	Size Adj	Rate	Cond	Market Value	Notes

MUNICIPAL SOFTWARE BY AVITAR

KINGSTON ASSESSING OFFICE

PARCEL TOTAL TAXABLE VALUE

Year	Building	Features	Land
2014	$ 125,100	$ 0	$ 75,000
		Parcel Total:	$ 200,100
2015	$ 125,100	$ 0	$ 75,000
		Parcel Total:	$ 200,100
2016	**$ 125,100**	**$ 0**	**$ 75,000**
		Parcel Total:	**$ 200,100**

LAND VALUATION

Zone: SFRAG SFR AGR **Minimum Acreage:** 1.84 **Minimum Frontage:** 200 **Site:** **Driveway:** **Road:**

Land Type	Units	Base Rate	NC	Adj	Site	Road	DWay	Topography	Cond	Ad Valorem	SPI	R	Tax Value	Notes
1F RES	0.710 ac	75,020	E	100	100	100	100		100	75,000	0	N	75,000	
	0.710 ac									75,000			**75,000**	

Map: 000R38 **Lot: 000008** **Sub: 000000** **Card: 1 of 1** **98 EXETER RD** **KINGSTON** **Printed: 07/22/2016**

PICTURE

OWNER

GRANDE, ANTHONY L

98 EXETER ROAD

KINGSTON, NH 03848

TAXABLE DISTRICTS

District	Percentage

PERMITS

Date	Permit ID	Permit Type	Notes

BUILDING DETAILS

Model: **1.00 STORY FRAME CONVENTION**
Roof: **GABLE HIP/ASPHALT**
Ext: **VINYL SIDING**
Int: **DRYWALL**
Floor: **CARPET/HARDWOOD**
Heat: **OIL/FA DUCTED**
Bedrooms: **2** Baths: **1.0** Fixtures:
Extra Kitchens: Fireplaces:
A/C: **No** Generators:
Quality: **A0 AVG**
Com. Wall:
Size Adj: **0.9873** Base Rate: **RSA 80.00**
Bldg. Rate: **0.9281**
Sq. Foot Cost: **$ 74.24**

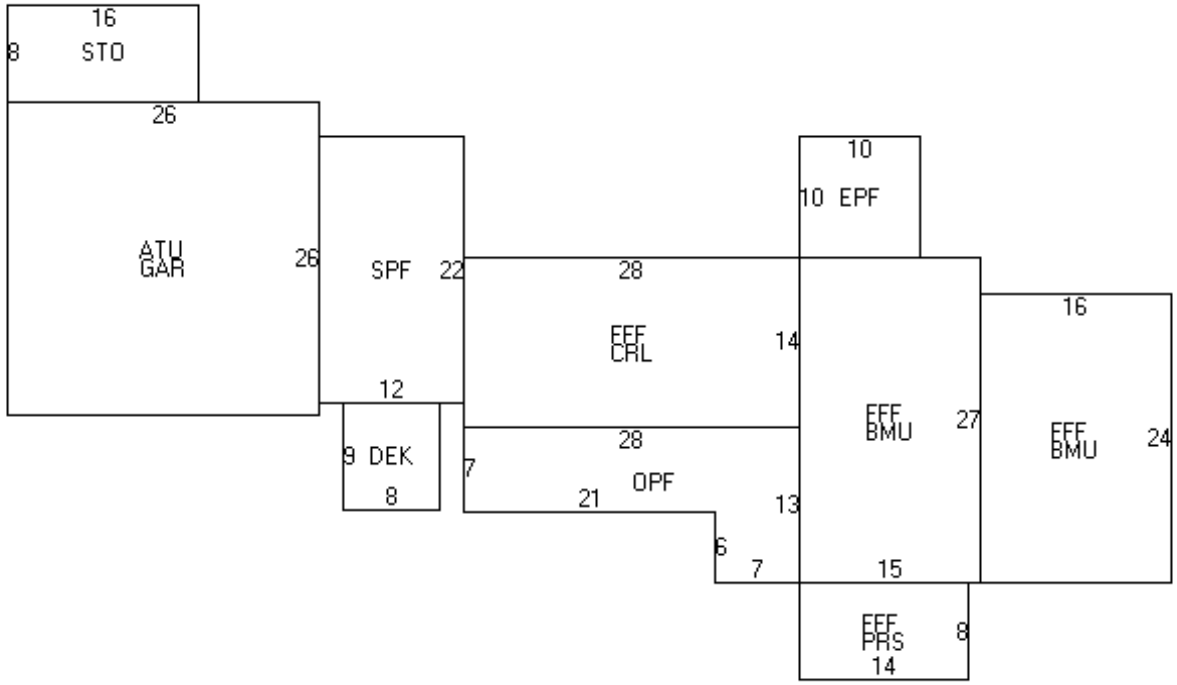

(STO=L16D8)(ATU,GAR=R26D26)U1(SPF=R12U22)D10(FFF,CRL=R28D14)(OPF=D13L7U6L21U7R28)D13(FFF,BMU=R15U27)D3(FFF,BMU=R16D24)L17(FFF,PRS=D8L14)U35(EPF=U10R10)L48D22(DEK=D9R8)

BUILDING SUB AREA DETAILS

ID	Description	Area	Adj.	Effect.
STO	STORAGE AREA	128	0.25	32
ATU	ATTIC	676	0.10	68
GAR	GARAGE	676	0.45	304
SPF	SCREEN PORCH	264	0.30	79
FFF	FST FLR FIN	1293	1.00	1293
CRL	CRAWL	392	0.00	0
OPF	OPEN PORCH FIN	238	0.25	60
BMU	BSMNT	789	0.15	118
PRS	PIERS/POSTS	112	0.00	0
EPF	ENCLSD PORCH	100	0.70	70
DEK	DECK/ENTRANCE	72	0.10	7
GLA:	**1,363**	**4,740**		**2,031**

2013 BASE YEAR BUILDING VALUATION

Market Cost New:		**$ 150,781**
Year Built:		**1939**
Condition For Age:	GOOD	**17 %**
Physical:		
Functional:		
Economic:		
Temporary:		
Total Depreciation:		**17 %**
Building Value:		**$ 125,100**

OWNER INFORMATION

WILLSON, JL & JH, TRUSTEES
WILLSON FAM. REV. FAM. TR.
74 EXETER ROAD

KINGSTON, NH 03848

SALES HISTORY

Date	Book	Page	Type	Price	Grantor
12/05/2007	4867	1977	U I 38		WILLSON

PICTURE

LISTING HISTORY

03/10/14 KCPU
07/02/12 KCM
05/15/03 BW O

NOTES

TAN, MAILBOX POSTS ADDRESS AS 74 EXETER ROAD, EST CHNGS FOR BMF, ADD A/C & PATIO 7/12KC, ADD SHED AND CHNG BTH COUNT 3/14KC

EXTRA FEATURES VALUATION

Feature Type	Units	Lngth x Width	Size Adj	Rate	Cond	Market Value	Notes
SHED-WOOD	280	14 x 20	117	10.00	100	3,276	
						3,300	

MUNICIPAL SOFTWARE BY AVITAR.

KINGSTON ASSESSING OFFICE

PARCEL TOTAL TAXABLE VALUE

Year	Building	Features	Land
2014	$ 119,000	$ 3,300	$ 86,300
		Parcel Total:	$ 208,600
2015	$ 119,000	$ 3,300	$ 86,300
		Parcel Total:	$ 208,600
2016	**$ 119,000**	**$ 3,300**	**$ 86,300**
		Parcel Total:	**$ 208,600**

LAND VALUATION

Zone: SFRAG SFR AGR **Minimum Acreage:** 1.84 **Minimum Frontage:** 200 **Site:** **Driveway:** **Road:**

Land Type	Units	Base Rate	NC	Adj	Site	Road	DWay	Topography	Cond	Ad Valorem	SPI	R	Tax Value	Notes
1F RES	1.840 ac	80,000	E	100	100	100	100		100	80,000	0	N	80,000	
1F RES	3.210 ac	x 2,000	X	98					100	6,300	0	N	6,300	
	5.050 ac									86,300			**86,300**	

Map: 000R38 **Lot: 00003B** **Sub: 000000** **Card: 1 of 1** **74 EXETER RD** **KINGSTON** **Printed: 07/22/2016**

PICTURE

OWNER

WILLSON, JL & JH, TRUSTEES
WILLSON FAM. REV. FAM. TR.
74 EXETER ROAD

KINGSTON, NH 03848

TAXABLE DISTRICTS

District	Percentage

PERMITS

Date	Permit ID	Permit Type	Notes
03/23/16	R38-3B	REPAIR	NEW KITCHEN CABINETS
11/17/13	R38-3B	NEW BUILDING	14 X 20 STORAGE SHED
04/08/13	R38-3B	ELECTRIC PERMIT	WIRE NEW BATH IN BASEM
03/28/13	R38-3B	PLUMBING PERMIT	ADD 3/4 BATH IN BASEME

BUILDING DETAILS

Model: **1.00 STORY FRAME R. RANCH**
Roof: **GABLE HIP/ASPHALT**
Ext: **VINYL SIDING**
Int: **DRYWALL**
Floor: **CARPET**
Heat: **OIL/HOT WATER**
Bedrooms: **3** Baths: **2.0** Fixtures:
Extra Kitchens: Fireplaces:
A/C: **Yes 100.00 %** Generators:
Quality: **A0 AVG**
Com. Wall:
Size Adj: **1.0624** Base Rate: **RSA 80.00**
Bldg. Rate: **1.0836**
Sq. Foot Cost: **$ 86.69**

BUILDING SUB AREA DETAILS

ID	Description	Area	Adj.	Effect.
DEK	DECK/ENTRANCE	159	0.10	16
PTO	PATIO	200	0.10	20
FFF	FST FLR FIN	1189	1.00	1189
BMF	BSMNT FINISHED	974	0.30	292
BMU	BSMNT	176	0.15	26
GLA:	**1,189**	**2,698**		**1,543**

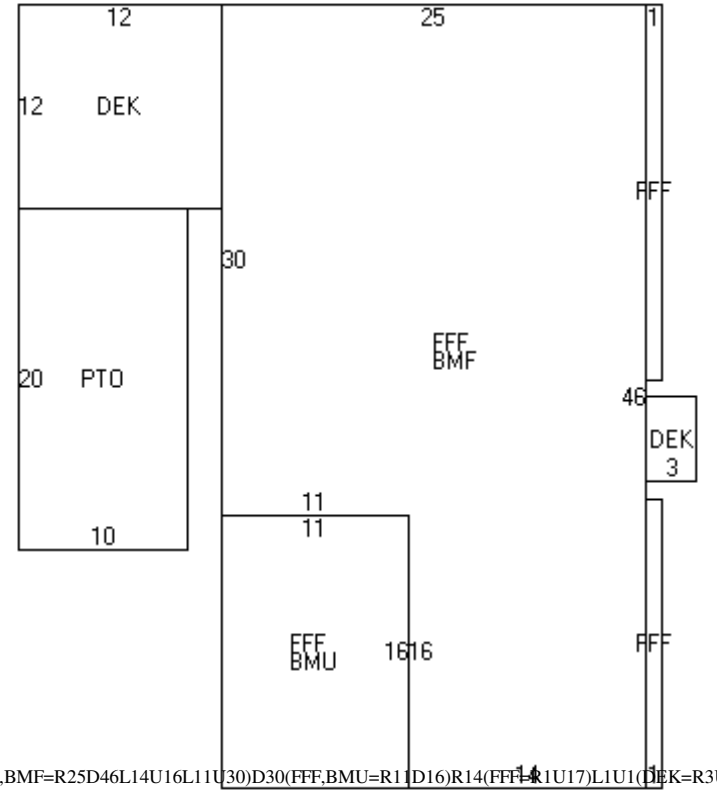

(DEK=L12D12)(PTO=D20R10)U32R2(FFF,BMF=R25D46L14U16L11U30)D30(FFF,BMU=R11D16)R14(FFF=R1U17)L1U1(DEK=R3U5)L3U1(FFF=U22R1)

2013 BASE YEAR BUILDING VALUATION

Market Cost New: **$ 133,763**
Year Built: **1985**
Condition For Age: GOOD **11 %**
Physical:
Functional:
Economic:
Temporary:
Total Depreciation: **11 %**

Building Value: **$ 119,000**

OWNER INFORMATION

BAKER, DEBRA A.
BAKER, ROBERT G. JR.
7 SCAMMON LANE

EXETER, NH 03833

SALES HISTORY

Date	Book	Page	Type	Price	Grantor
05/14/2012	5315	2666	U I 99	175,000	SMITH, DEBORAH A
04/15/1996	3149	1181	U I 38		SMITH, DAVID A

PICTURE

LISTING HISTORY

07/06/12 KCM
10/06/03 EE O

NOTES

B-3314. CORRECT CARD 2 SKETCH 7/12KC

EXTRA FEATURES VALUATION

Feature Type	Units	Lngth x Width	Size Adj	Rate	Cond	Market Value	Notes
OVER HEAD DOOR	100	10 x 10	100	20.00	86	1,720	
OVER HEAD DOOR	100	10 x 10	100	20.00	86	1,720	
						3,400	

MUNICIPAL SOFTWARE BY AVITAR

KINGSTON ASSESSING OFFICE

PARCEL TOTAL TAXABLE VALUE

Year	Building	Features	Land
2014	$ 135,300	$ 3,400	$ 97,300
		Parcel Total:	$ 236,000
2015	$ 135,300	$ 3,400	$ 97,300
		Parcel Total:	$ 236,000
2016	**$ 38,800**	**$ 3,400**	**$ 97,300**(c)
		Parcel Total:	**$ 236,000**

(Card Total: $ 139,500)

LAND VALUATION

Zone: SFRAG SFR AGR **Minimum Acreage:** 1.84 **Minimum Frontage:** 200 **Site:** **Driveway:** **Road:**

Land Type	Units	Base Rate	NC	Adj	Site	Road	DWay	Topography	Cond	Ad Valorem	SPI	R	Tax Value	Notes
COM/IND	1.200 ac	77,800	E	100	100	100	100		125	97,300	0	N	97,300	USE
	1.200 ac									97,300			**97,300**	

PICTURE

OWNER

BAKER, DEBRA A.
BAKER, ROBERT G. JR.
7 SCAMMON LANE

EXETER, NH 03833

TAXABLE DISTRICTS

District	Percentage

PERMITS

Date	Permit ID	Permit Type	Notes

BUILDING DETAILS

Model: **1.00 STORY FRAME GARAGE/COM**
Roof: **GABLE HIP/ASPHALT**
Ext: **PREFAB WD PNL**
Int: **MINIMUM**
Floor: **CONCRETE**
Heat: **WOOD/COAL/NONE**
Bedrooms: Baths: Fixtures:
Extra Kitchens: Fireplaces:
A/C: **No** Generators:
Quality: **A0 AVG**
Com. Wall:
Size Adj: **1.4010** Base Rate: **CIG 66.00**
Bldg. Rate: **0.7285**
Sq. Foot Cost: **$ 48.08**

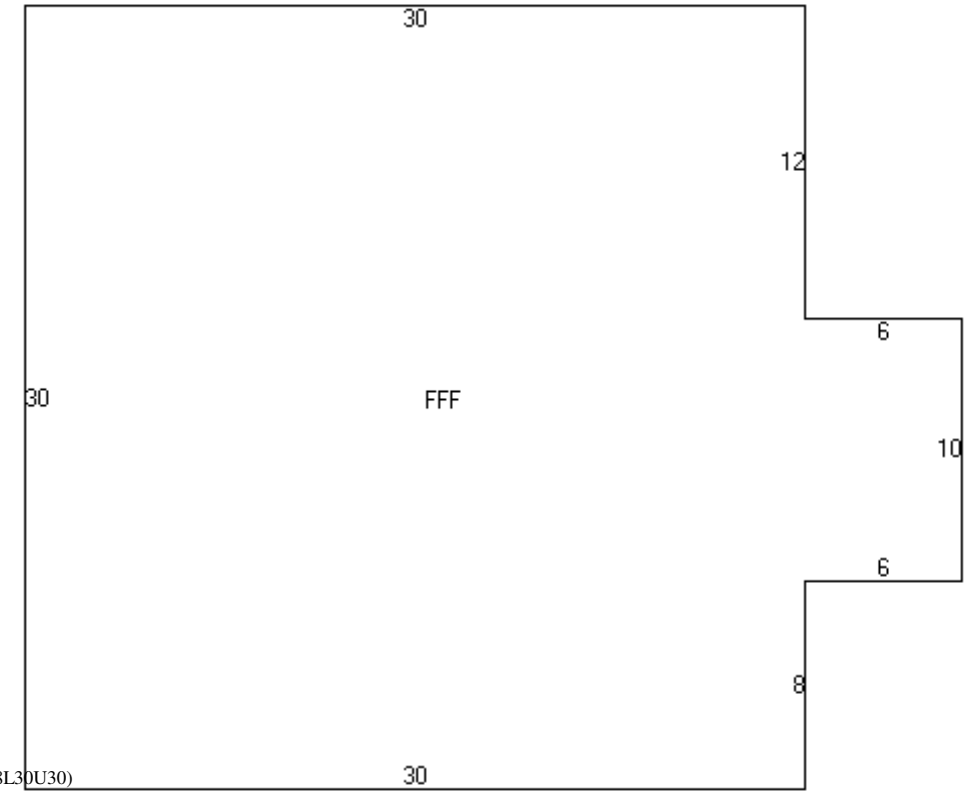

(FFF=R30D12R6D10L6D8L30U30)

BUILDING SUB AREA DETAILS

ID	Description	Area	Adj.	Effect.
FFF	FST FLR FIN	960	1.00	960
GLA:	**960**	**960**		**960**

2013 BASE YEAR BUILDING VALUATION

Market Cost New:		**$ 46,157**
Year Built:		**1985**
Condition For Age:	AVERAGE	**16 %**
Physical:		
Functional:		
Economic:		
Temporary:		
Total Depreciation:		**16 %**
Building Value:		**$ 38,800**

OWNER INFORMATION

BAKER, DEBRA A.
BAKER, ROBERT G. JR.
7 SCAMMON LANE

EXETER, NH 03833

SALES HISTORY

Date	Book	Page	Type	Price	Grantor

PICTURE

LISTING HISTORY

10/06/03 EE O

NOTES

BROWN

EXTRA FEATURES VALUATION

Feature Type	Units	Lngth x Width	Size Adj	Rate	Cond	Market Value	Notes

MUNICIPAL SOFTWARE BY AVITAR

KINGSTON ASSESSING OFFICE

PARCEL TOTAL TAXABLE VALUE

Year	Building	Features	Land
2016	$ 96,500	$ 0	$ 0(c)

Parcel Total: $ 236,000

(Card Total: $ 96,500)

LAND VALUATION

Zone: **Minimum Acreage:** **Minimum Frontage:** **Site:** **Driveway:** **Road:**

Land Type	Units	Base Rate	NC	Adj	Site	Road	DWay	Topography	Cond	Ad Valorem	SPI	R	Tax Value	Notes
COM/IND	0 ac													

PICTURE

OWNER

BAKER, DEBRA A.
BAKER, ROBERT G. JR.
7 SCAMMON LANE

EXETER, NH 03833

TAXABLE DISTRICTS

District	Percentage

PERMITS

Date	Permit ID	Permit Type	Notes

BUILDING DETAILS

Model: **1.00 STORY FRAME RANCH**
Roof: **GABLE HIP/ASPHALT**
Ext: **CLAP BOARD**
Int: **DRYWALL**
Floor: **PINE/SOFT WD/CARPET**
Heat: **OIL/FA NO DUCTS**
Bedrooms: **3** Baths: **1.0** Fixtures:
Extra Kitchens: Fireplaces:
A/C: **No** Generators:
Quality: **A0 AVG**
Com. Wall:
Size Adj: **1.0799** Base Rate: **RSA 80.00**
Bldg. Rate: **0.9827**
Sq. Foot Cost: **$ 78.62**

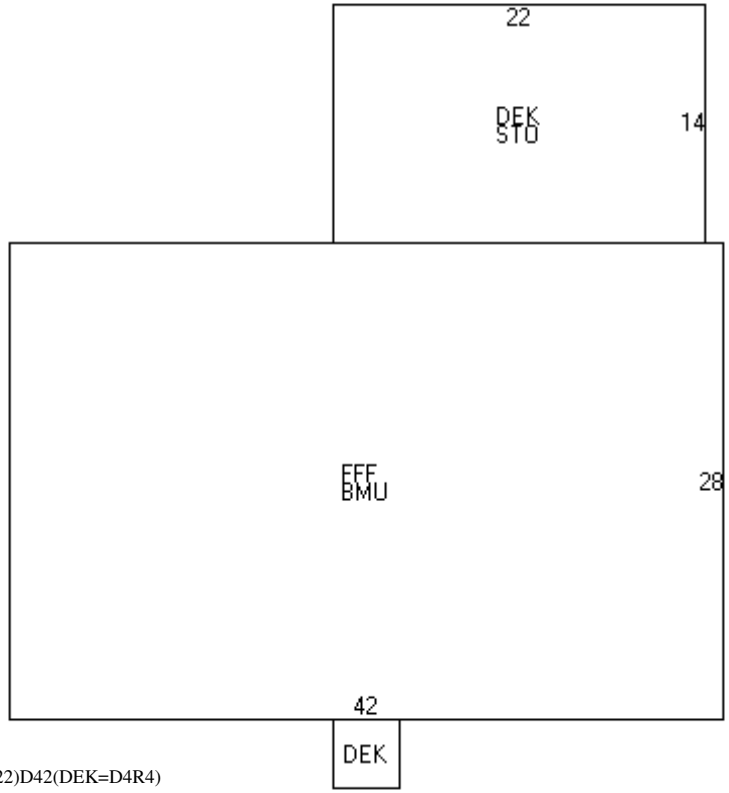

(FFF,BMU=R42U28)L1(DEK,STO=U14L22)D42(DEK=D4R4)

BUILDING SUB AREA DETAILS

ID	Description	Area	Adj.	Effect.
FFF	FST FLR FIN	1176	1.00	1176
BMU	BSMNT	1176	0.15	176
DEK	DECK/ENTRANCE	324	0.10	32
STO	STORAGE AREA	308	0.25	77
GLA:	**1,176**	**2,984**		**1,461**

2013 BASE YEAR BUILDING VALUATION

Market Cost New:		**$ 114,864**
Year Built:		**1985**
Condition For Age:	FAIR	**16 %**
Physical:		
Functional:		
Economic:		
Temporary:		
Total Depreciation:		**16 %**
Building Value:		**$ 96,500**

OWNER INFORMATION

SMITH, JAMES B
SMITH, JENNIFER L
60 EXETER RD

KINGSTON, NH 03848

SALES HISTORY

Date	Book	Page	Type	Price	Grantor

PICTURE

LISTING HISTORY

07/06/12	KCML
03/01/05	BW X
05/27/03	KJ O
05/06/03	BW X

NOTES

CREAM, DRIVEWAY EASEMENT, 3/05 MINOR AT DOOR, EST ADDTN FIN-BW, COORECT IG POOL & SKETCH 7/12KC

EXTRA FEATURES VALUATION

Feature Type	Units	Lngth x Width	Size Adj	Rate	Cond	Market Value	Notes
IN GRND POOL/VINYL	576	36 x 16	88	38.00	100	19,261	
FIREPLACE 1-1	1		100	3,000.00	100	3,000	
						22,300	

MUNICIPAL SOFTWARE BY AVITAR

KINGSTON ASSESSING OFFICE

PARCEL TOTAL TAXABLE VALUE

Year	Building	Features	Land
2014	$ 303,800	$ 22,300	$ 85,900
		Parcel Total:	$ 412,000
2015	$ 303,800	$ 22,300	$ 85,900
		Parcel Total:	$ 412,000
2016	**$ 303,800**	**$ 22,300**	**$ 85,900**
		Parcel Total:	**$ 412,000**

LAND VALUATION

Zone: SFRAG SFR AGR **Minimum Acreage:** 1.84 **Minimum Frontage:** 200 **Site:** **Driveway:** **Road:**

Land Type	Units	Base Rate	NC	Adj	Site	Road	DWay	Topography	Cond	Ad Valorem	SPI	R	Tax Value	Notes
1F RES	1.840 ac	80,000	E	100	100	100	100		100	80,000	0	N	80,000	
1F RES	3.370 ac	x 2,000	X	97					90	5,900	0	N	5,900	TOPO
	5.210 ac									85,900			**85,900**	

Map: 000R39 **Lot: 000033** **Sub: 000004** **Card: 1 of 1** **60 EXETER RD** **KINGSTON** **Printed: 07/22/2016**

PICTURE

OWNER

SMITH, JAMES B
SMITH, JENNIFER L
60 EXETER RD

KINGSTON, NH 03848

TAXABLE DISTRICTS

District	Percentage

PERMITS

Date	Permit ID	Permit Type	Notes
03/25/04	R39-33-4	ADDITION	ADD SECOND STORY

BUILDING DETAILS

Model: **1.75 STORY FRAME CAPE**
Roof: **GABLE HIP/ASPHALT**
Ext: **CLAP BOARD**
Int: **DRYWALL**
Floor: **HARDWOOD/CARPET**
Heat: **OIL/HOT WATER**
Bedrooms: **4** Baths: **3.0** Fixtures:
Extra Kitchens: Fireplaces:
A/C: **No** Generators:
Quality: **A2 AVG+20**
Com. Wall:
Size Adj: **0.8649** Base Rate: **RSA 80.00**
Bldg. Rate: **1.0172**
Sq. Foot Cost: **$ 81.38**

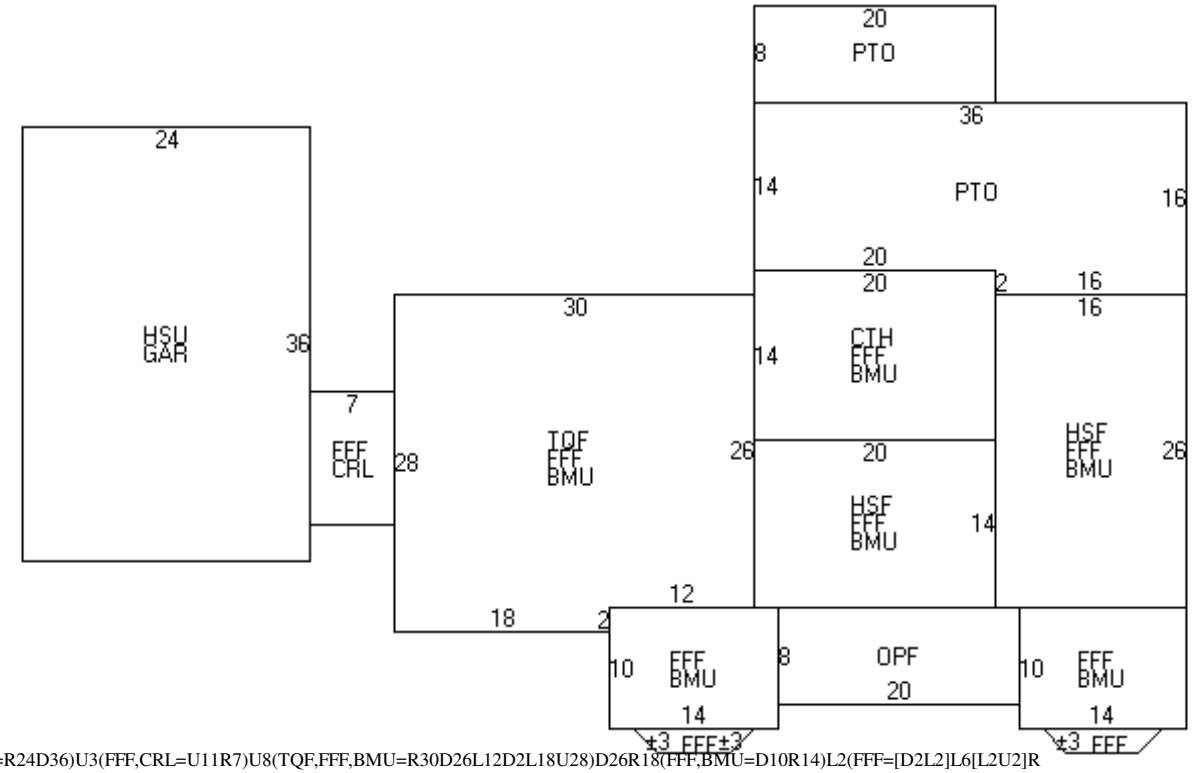

(HSU,GAR=R24D36)U3(FFF,CRL=U11R7)U8(TQF,FFF,BMU=R30D26L12D2L18U28)D26R18(FFF,BMU=D10R14)L2(FFF=[D2L2]L6[L2U2]R10)U10R2(OPF=D8R20)U8(FFF,BMU=D10R14)L2(FFF=[D2L2]L6[L2U2]R10)R2U10(HSF,FFF,BMU=U26L16)D26(HSF,FFF,BMU=U14L20)(CTH,FFF,BMU=U14R20)(PTO=D2R16U16L36D14R20)L20U14(PTO=U8R20)

BUILDING SUB AREA DETAILS

ID	Description	Area	Adj.	Effect.
OPF	OPEN PORCH FIN	160	0.25	40
HSU	1/2 STRY UNFIN	864	0.25	216
GAR	GARAGE	864	0.45	389
FFF	FST FLR FIN	2181	1.00	2181
CRL	CRAWL	77	0.00	0
TQF	3/4 STRY FIN	816	0.75	612
BMU	BSMNT	2072	0.15	311
HSF	1/2 STRY FIN	696	0.50	348
CTH	CATHEDRAL	280	0.10	28
PTO	PATIO	696	0.10	70
GLA:	**3,141**	**8,706**		**4,195**

2013 BASE YEAR BUILDING VALUATION

Market Cost New:		**$ 341,389**
Year Built:		**1994**
Condition For Age:	AVERAGE	**11 %**
Physical:		
Functional:		
Economic:		
Temporary:		
Total Depreciation:		**11 %**
Building Value:		**$ 303,800**

OWNER INFORMATION

HENSHAW, LILLIAN A., TR.
LILLIAN A. HENSHAW TRUST
66 EXETER RD

KINGSTON, NH 03848

SALES HISTORY

Date	Book	Page	Type	Price	Grantor
12/18/2006	4745	1780	U I 38		HENSHAW

PICTURE

LISTING HISTORY

02/20/13	KCPU
07/06/12	KCML
04/23/07	JARX
05/19/03	BW O
05/07/03	BW X

NOTES

WHITE, SEPTIC NEEDS TO BE UPDATED, CEILING DAMAGE, PLUMBING & ELECTRICAL NEED UPDATING, INT WALL CHANGED TO WALLBOARD, CHANGES MADE @ HEARINGS --- RW. NEW ROOF 100% NV CH JAR 4/07, ADD DEK & CHNG LABELING 7/12KC, NVCHNG 2/13KC

EXTRA FEATURES VALUATION

Feature Type	Units	Lngth x Width	Size Adj	Rate	Cond	Market Value	Notes
SHED-WOOD	225	15 x 15	131	10.00	70	2,063	
						2,100	

MUNICIPAL SOFTWARE BY AVITAR.

KINGSTON ASSESSING OFFICE

PARCEL TOTAL TAXABLE VALUE

Year	Building	Features	Land
2014	$ 190,300	$ 2,100	$ 75,899
		Parcel Total:	$ 268,299
2015	$ 190,300	$ 2,100	$ 75,866
		Parcel Total:	$ 268,266
2016	**$ 190,300**	**$ 2,100**	**$ 75,866**
		Parcel Total:	**$ 268,266**

LAND VALUATION

Zone: SFRAG SFR AGR **Minimum Acreage:** 1.84 **Minimum Frontage:** 200 **Site:** **Driveway:** **Road:**

Land Type	Units	Base Rate	NC	Adj	Site	Road	DWay	Topography	Cond	Ad Valorem	SPI	R	Tax Value	Notes
1F RES	0.750 ac	75,500	E	100	100	100	100		100	75,500	0	N	75,500	
FARM LAND	1.180 ac	x 2,000	X	100					100	2,400	72	N	346	
WETLANDS	1.170 ac	x 2,000	X	100					100	2,300	100	N	20	
	3.100 ac									80,200			**75,866**	

PICTURE

OWNER

HENSHAW, LILLIAN A., TR.
LILLIAN A. HENSHAW TRUST
66 EXETER RD

KINGSTON, NH 03848

TAXABLE DISTRICTS

District	Percentage

PERMITS

Date	Permit ID	Permit Type	Notes
07/19/12	R39-34	ELECTRIC PERMIT	CHANGES FUSES TO BREA
01/16/07	R39-34	REPAIR	STRIP AND RER0OF

BUILDING DETAILS

Model: **2.50 STORY FRAME COLONIAL**
Roof: **GABLE HIP/ASPHALT**
Ext: **CLAP BOARD**
Int: **WALL BOARD/CUSTOM WOOD**
Floor: **PINE/SOFT WD/HARDWOOD**
Heat: **OIL/STEAM**
Bedrooms: **6** Baths: **3.0** Fixtures:
Extra Kitchens: Fireplaces:
A/C: **No** Generators:
Quality: **A3 AVG+30**
Com. Wall:
Size Adj: **0.8672** Base Rate: **RSA 80.00**
Bldg. Rate: **1.0717**
Sq. Foot Cost: **$ 85.73**

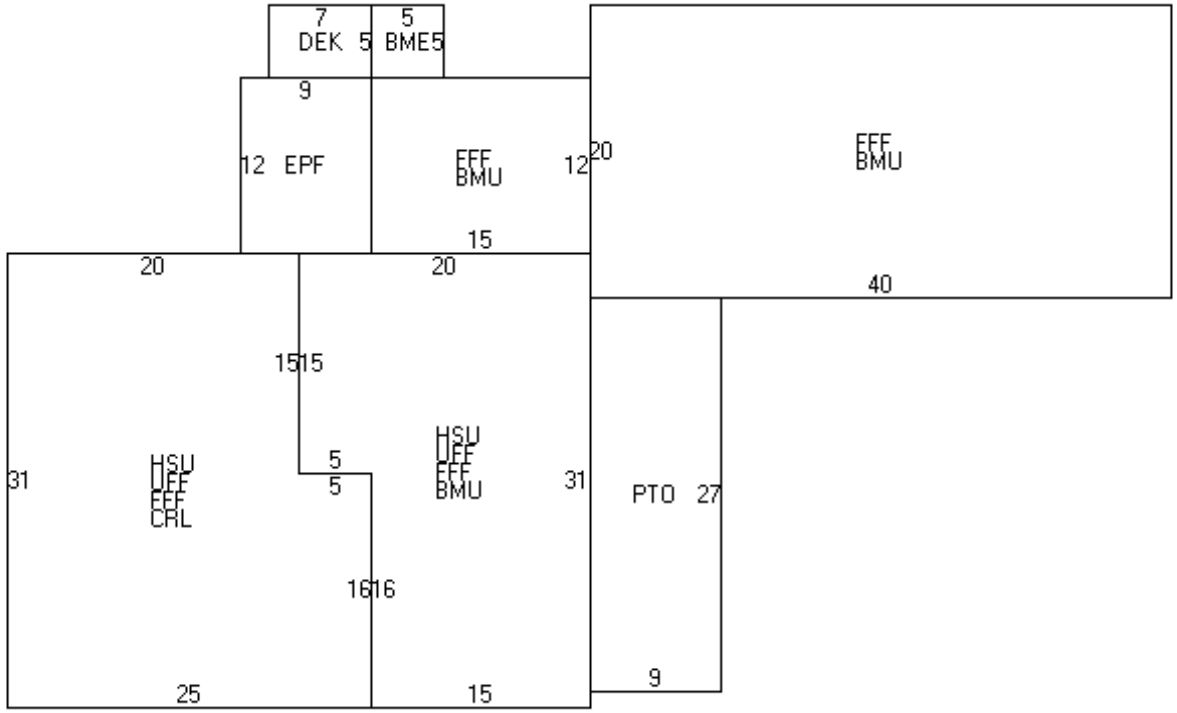

(HSU,UFF,FFF,CRL=L20D31R25U16L5U15)(HSU,UFF,FFF,BMU=D15R5D16R15U31L20)R5(FFF,BMU=R15U12)L10(BME=U5L5)D5(EPF=L9D12)R24U17(FFF,BMU=D20R40)L31(PTO=D27L9)L15U42(DEK=U5L7)

BUILDING SUB AREA DETAILS

ID	Description	Area	Adj.	Effect.
HSU	1/2 STRY UNFIN	1240	0.25	310
UFF	UPPER FLR FIN	1240	1.00	1240
FFF	FST FLR FIN	2220	1.00	2220
CRL	CRAWL	700	0.00	0
BMU	BSMNT	1520	0.15	228
BME	BSMT ENTRY	25	0.35	9
EPF	ENCLSD PORCH	108	0.70	76
PTO	PATIO	243	0.10	24
DEK	DECK/ENTRANCE	35	0.10	4
GLA:	**3,536**	**7,331**		**4,111**

2013 BASE YEAR BUILDING VALUATION

Market Cost New:		**$ 352,436**
Year Built:		**1809**
Condition For Age:	AVERAGE	**36 %**
Physical:		
Functional:	NDS UPDAT	**10 %**
Economic:		
Temporary:		
Total Depreciation:		**46 %**
Building Value:		**$ 190,300**

OWNER INFORMATION

CHARETTE, MARY C
CHARETTE, CHARLES
PO BOX 362

KINGSTON, NH 03848-0362

SALES HISTORY

Date	Book	Page	Type	Price	Grantor
10/29/2012	5371	1254	U I 38		CHARETTE, MARY C
03/20/1987	2667	1095	U I 82		BERECZ, STEPHEN

PICTURE

LISTING HISTORY

07/06/12 KCM
05/07/03 BW O

NOTES

YELLOW, FOUNDATION CRACKS, CHIMNET CRACKS, FLOORS WARPED, FIREPLACE IS NON-FUNCTIONAL, FLOOR JOISTS UNEVEN, CORRECT DEK AREA & EXTRA FEATURES 7/12KC

EXTRA FEATURES VALUATION

Feature Type	Units	Lngth x Width	Size Adj	Rate	Cond	Market Value	Notes
FIREPLACE 1-1	1		100	3,000.00	100	3,000	
SHED-WOOD	192	12 x 16	143	10.00	100	2,746	
SHED-WOOD	128	8 x 16	185	10.00	65	1,539	
						7,300	

MUNICIPAL SOFTWARE BY AVITAR

KINGSTON ASSESSING OFFICE

PARCEL TOTAL TAXABLE VALUE

Year	Building	Features	Land
2014	$ 102,300	$ 7,300	$ 81,300
		Parcel Total:	$ 190,900
2015	$ 102,300	$ 7,300	$ 81,300
		Parcel Total:	$ 190,900
2016	**$ 102,300**	**$ 7,300**	**$ 81,300**
		Parcel Total:	**$ 190,900**

LAND VALUATION

Zone: SFRAG SFR AGR **Minimum Acreage:** 1.84 **Minimum Frontage:** 200 **Site:** **Driveway:** **Road:**

Land Type	Units	Base Rate	NC	Adj	Site	Road	DWay	Topography	Cond	Ad Valorem	SPI	R	Tax Value	Notes
1F RES	1.840 ac	80,000	E	100	100	100	100		100	80,000	0	N	80,000	
1F RES	0.660 ac	x 2,000	X	100					95	1,300	0	N	1,300	TOPO
	2.500 ac									81,300			**81,300**	

Map: 000R39 **Lot: 00036C** **Sub: 000000** **Card: 1 of 1** **46 EXETER RD** **KINGSTON** **Printed: 07/22/2016**

PICTURE

OWNER

CHARETTE, MARY C
CHARETTE, CHARLES
PO BOX 362

KINGSTON, NH 03848-0362

TAXABLE DISTRICTS

District	Percentage

PERMITS

Date	Permit ID	Permit Type	Notes
06/29/15	R39-36C	ELECTRIC PERMIT	GENERATOR

BUILDING DETAILS

Model: **1.00 STORY FRAME R. RANCH**
Roof: **GABLE HIP/ASPHALT**
Ext: **VINYL SIDING**
Int: **DRYWALL**
Floor: **CARPET**
Heat: **OIL/HOT WATER**
Bedrooms: **3** Baths: **1.0** Fixtures:
Extra Kitchens: Fireplaces:
A/C: **No** Generators:
Quality: **A0 AVG**
Com. Wall:
Size Adj: **1.0783** Base Rate: **RSA 80.00**
Bldg. Rate: **1.0244**
Sq. Foot Cost: **$ 81.95**

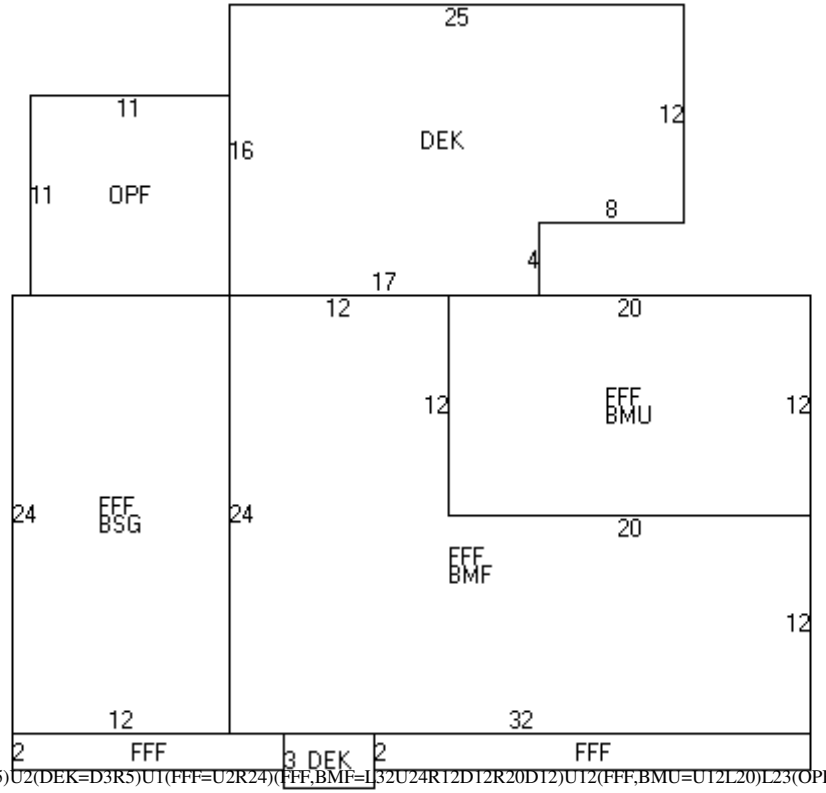

(FFF,BSG=D24R12)L12(FFF=D2R15)U2(DEK=D3R5)U1(FFF=U2R24)(FFF,BMF=L32U24R12D12R20D12)U12(FFF,BMU=U12L20)L23(OPF=U11R11)D11(DEK=U16R25D12L8D4L17)

BUILDING SUB AREA DETAILS

ID	Description	Area	Adj.	Effect.
FFF	FST FLR FIN	1134	1.00	1134
BSG	BSMT GAR	288	0.25	72
DEK	DECK/ENTRANCE	383	0.10	38
BMF	BSMNT FINISHED	528	0.30	158
BMU	BSMNT	240	0.15	36
OPF	OPEN PORCH FIN	121	0.25	30
GLA:	**1,134**	**2,694**		**1,468**

2013 BASE YEAR BUILDING VALUATION

Market Cost New:		**$ 120,303**
Year Built:		**1978**
Condition For Age:	AVERAGE	**15 %**
Physical:		
Functional:		
Economic:		
Temporary:		
Total Depreciation:		**15 %**
Building Value:		**$ 102,300**