OWNER INFORMATION

YONKER, CHRISTOPHER J.
YONKER, JOLIE
4 SOUTH RD

BRENTWOOD, NH 03833-3152

SALES HISTORY

Date	Book	Page	Type	Price	Grantor
09/05/2007	4840	2355	Q I	320,600	JOHNSON TRUST

PICTURE

LISTING HISTORY

06/28/12 KCML
05/12/03 BW

NOTES

TAN, EXTERIOR WALLS ARE MESH

EXTRA FEATURES VALUATION

Feature Type	Units	Lngth x Width	Size Adj	Rate	Cond	Market Value	Notes
FIREPLACE 1-1	1		100	3,000.00	100	3,000	
						3,000	

MUNICIPAL SOFTWARE BY AVITAR.

KINGSTON ASSESSING OFFICE

PARCEL TOTAL TAXABLE VALUE

Year	Building	Features	Land
2014	$ 159,000	$ 3,000	$ 81,900
		Parcel Total:	$ 243,900
2015	$ 159,000	$ 3,000	$ 81,900
		Parcel Total:	$ 243,900
2016	**$ 159,000**	**$ 3,000**	**$ 81,900**
		Parcel Total:	**$ 243,900**

LAND VALUATION

Zone: SFRAG SFR AGR **Minimum Acreage:** 1.84 **Minimum Frontage:** 200 **Site:** **Driveway:** **Road:**

Land Type	Units	Base Rate	NC	Adj	Site	Road	DWay	Topography	Cond	Ad Valorem	SPI	R	Tax Value	Notes
1F RES	1.840 ac	80,000	E	100	100	100	100		100	80,000	0	N	80,000	
1F RES	0.960 ac	x 2,000	X	100					100	1,900	0	N	1,900	
	2.800 ac									81,900			**81,900**	

Map: 000R37 **Lot: 000005** **Sub: 000000** **Card: 1 of 1** **4 SOUTH RD** **KINGSTON** **Printed: 03/02/2016**

PICTURE

OWNER

YONKER, CHRISTOPHER J.
YONKER, JOLIE
4 SOUTH RD

BRENTWOOD, NH 03833-3152

TAXABLE DISTRICTS

District	Percentage

PERMITS

Date	Permit ID	Permit Type	Notes

BUILDING DETAILS

Model: **1.75 STORY FRAME CAPE**
Roof: **GABLE HIP/ASPHALT**
Ext: **BELOW AVG**
Int: **DRYWALL**
Floor: **HARDWOOD/CARPET**
Heat: **OIL/HOT WATER**
Bedrooms: **3** Baths: **2.5** Fixtures:
Extra Kitchens: Fireplaces:
A/C: **No** Generators:
Quality: **A1 AVG+10**
Com. Wall:
Size Adj: **0.9294** Base Rate: **RSA 80.00**
Bldg. Rate: **0.8805**
Sq. Foot Cost: **$ 70.44**

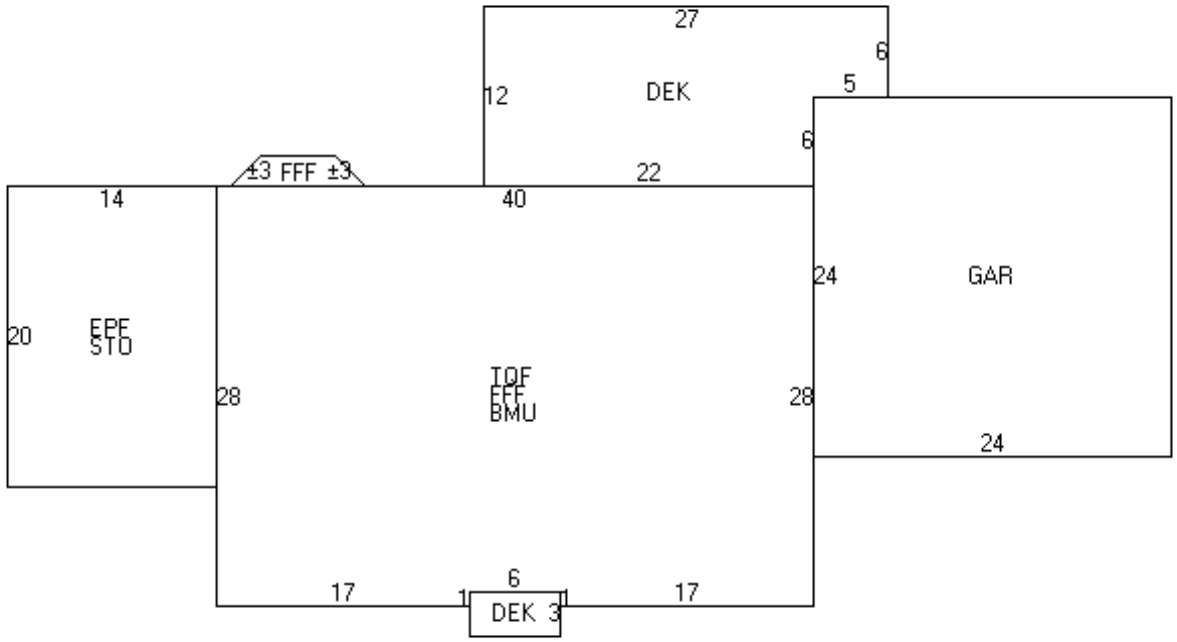

(EPF,STO=U20R14)(TQF,FFF,BMU=D28R17U1R6D1R17U28L40)R1(FFF=[U2R2]R5[R2D2]L9)R17(DEK=U12R27D6L5D6L22)R22U6(GAR=D24R24)L24D10L17U1(DEK=D3L6)

BUILDING SUB AREA DETAILS

ID	Description	Area	Adj.	Effect.
EPF	ENCLSD PORCH	280	0.70	196
STO	STORAGE AREA	280	0.25	70
TQF	3/4 STRY FIN	1114	0.75	836
FFF	FST FLR FIN	1128	1.00	1128
BMU	BSMNT	1114	0.15	167
DEK	DECK/ENTRANCE	312	0.10	31
GAR	GARAGE	576	0.45	259
GLA:	**2,160**	**4,804**		**2,687**

2013 BASE YEAR BUILDING VALUATION

Market Cost New:		**$ 189,272**
Year Built:		**1970**
Condition For Age:	AVERAGE	**16 %**
Physical:		
Functional:		
Economic:		
Temporary:		
Total Depreciation:		**16 %**
Building Value:		**$ 159,000**

OWNER INFORMATION

HOWES, CAROL A

18 SOUTH RD

BRENTWOOD, NH 03833-6305

SALES HISTORY

Date	Book	Page	Type	Price	Grantor
10/12/2010	5153	1916	U I 39		HOWES, ROBERT P
06/28/1996	3167	2464	U V 82		MACDONALD, PERRY A

PICTURE

LISTING HISTORY

06/28/12	KCM	
02/26/09	FRR	ESTIMATE 100%
05/12/03	BW	LIST FOR REVAL

NOTES

D-7227. YELLOW., CORRECT INFO 6/12KC

EXTRA FEATURES VALUATION

Feature Type	Units	Lngth x Width	Size Adj	Rate	Cond	Market Value	Notes
FIREPLACE 1-1	1		100	3,000.00	100	3,000	
						3,000	

MUNICIPAL SOFTWARE BY AVITAR

KINGSTON ASSESSING OFFICE

PARCEL TOTAL TAXABLE VALUE

Year	Building	Features	Land
2014	$ 139,600	$ 3,000	$ 82,200
		Parcel Total:	$ 224,800
2015	$ 139,600	$ 3,000	$ 82,200
		Parcel Total:	$ 224,800
2016	**$ 139,600**	**$ 3,000**	**$ 82,200**
		Parcel Total:	**$ 224,800**

LAND VALUATION

Zone: SFRAG SFR AGR **Minimum Acreage:** 1.84 **Minimum Frontage:** 200 **Site:** **Driveway:** **Road:**

Land Type	Units	Base Rate	NC	Adj	Site	Road	DWay	Topography	Cond	Ad Valorem	SPI	R	Tax Value	Notes
1F RES	1.840 ac	80,000	E	100	100	100	100		100	80,000	0	N	80,000	
1F RES	1.120 ac	x 2,000	X	100					100	2,200	0	N	2,200	
	2.960 ac									82,200			**82,200**	

Map: 000R37 **Lot: 000006** **Sub: 000000** **Card: 1 of 1** **18 SOUTH RD** **KINGSTON** **Printed: 03/02/2016**

PICTURE

OWNER

HOWES, CAROL A

18 SOUTH RD

BRENTWOOD, NH 03833-6305

TAXABLE DISTRICTS

District	Percentage

PERMITS

Date	Permit ID	Permit Type	Notes
01/21/97	CA19960040	SEPTIC	APPROVAL FOR OPERATIC
10/10/96	R37-6	NEW BUILDING	HOUSE
08/28/96	CA19960040	SEPTIC	APPROVAL FOR CONSTRU(

BUILDING DETAILS

Model: **1.75 STORY FRAME CONVENTION**
Roof: **GABLE HIP/ASPHALT**
Ext: **CEDAR/REDWD**
Int: **DRYWALL**
Floor: **HARD TILE/HARDWOOD**
Heat: **GAS/FA DUCTED**
Bedrooms: **3** Baths: **1.5** Fixtures:
Extra Kitchens: Fireplaces:
A/C: **No** Generators:
Quality: **A0 AVG**
Com. Wall:
Size Adj: **0.9877** Base Rate: **RSA 80.00**
Bldg. Rate: **0.9778**
Sq. Foot Cost: **$ 78.23**

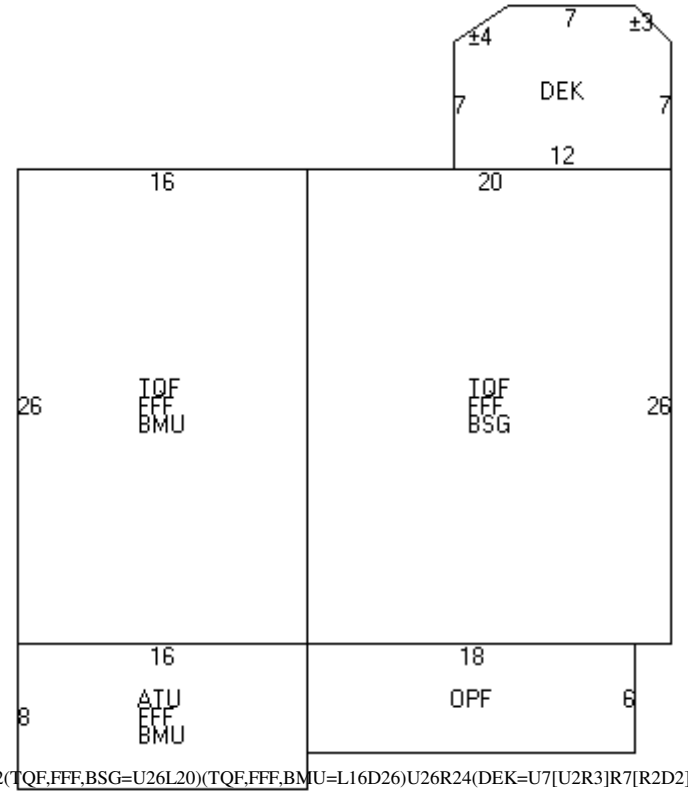

(ATU,FFF,BMU=U8R16)(OPF=R18D6)U6R2(TQF,FFF,BSG=U26L20)(TQF,FFF,BMU=L16D26)U26R24(DEK=U7[U2R3]R7[R2D2]D7L12)

BUILDING SUB AREA DETAILS

ID	Description	Area	Adj.	Effect.
ATU	ATTIC	128	0.10	13
FFF	FST FLR FIN	1064	1.00	1064
BMU	BSMNT	544	0.15	82
OPF	OPEN PORCH FIN	108	0.25	27
TQF	3/4 STRY FIN	936	0.75	702
BSG	BSMT GAR	520	0.25	130
DEK	DECK/ENTRANCE	103	0.10	10
GLA:	**1,766**	**3,403**		**2,028**

2013 BASE YEAR BUILDING VALUATION

Market Cost New:		**$ 158,650**
Year Built:		**1998**
Condition For Age:	AVERAGE	**10 %**
Physical:	SEE NOTES	**2 %**
Functional:		
Economic:		
Temporary:		
Total Depreciation:		**12 %**
Building Value:		**$ 139,600**

OWNER INFORMATION

PERREAULT, SCOTT R

20 SOUTH RD

EXETER, NH 03833

SALES HISTORY

Date	Book	Page	Type	Price	Grantor
02/29/2016	5695	0440	U I 38		PERREAULT, SCOTT R
01/14/1994	3032	1942	U I 82		JOHNSON, JOEL

PICTURE

LISTING HISTORY

06/28/12	KCM	CHNG COND & ADD DK
03/01/05	BW X	NO DEK, ADD HSF
04/20/04	SH X	DK OUT BACK, ELECTRICAL
05/12/03	BW	RECHECK 2004

NOTES

D-21133. TAN. 15' ROAD IMPROVEMENT EASEMENT. WELL RADIUS RELEASE RCRD 2865-2191.

EXTRA FEATURES VALUATION

Feature Type	Units	Lngth x Width	Size Adj	Rate	Cond	Market Value	Notes
FIREPLACE 1-1	1		100	3,000.00	100	3,000	
						3,000	

MUNICIPAL SOFTWARE BY AVITAR

KINGSTON ASSESSING OFFICE

PARCEL TOTAL TAXABLE VALUE

Year	Building	Features	Land
2014	$ 229,200	$ 3,000	$ 84,800
		Parcel Total:	$ 317,000
2015	$ 229,200	$ 3,000	$ 84,800
		Parcel Total:	$ 317,000
2016	**$ 229,200**	**$ 3,000**	**$ 84,800**
		Parcel Total:	**$ 317,000**

LAND VALUATION

Zone: SFRAG SFR AGR **Minimum Acreage:** 1.84 **Minimum Frontage:** 200 **Site:** **Driveway:** **Road:**

Land Type	Units	Base Rate	NC	Adj	Site	Road	DWay	Topography	Cond	Ad Valorem	SPI	R	Tax Value	Notes
1F RES	1.840 ac	80,000	E	100	100	100	100		100	80,000	0	N	80,000	
1F RES	2.380 ac	x 2,000	X	100					100	4,800	0	N	4,800	
	4.220 ac									84,800			**84,800**	

Map: 000R37 Lot: 000008 Sub: 000000 Card: 1 of 1 20 SOUTH RD KINGSTON Printed: 03/02/2016

PICTURE

OWNER

PERREAULT, SCOTT R

20 SOUTH RD

EXETER, NH 03833

TAXABLE DISTRICTS

District	Percentage

PERMITS

Date	Permit ID	Permit Type	Notes

BUILDING DETAILS

Model: **1.50 STORY FRAME CAPE**
Roof: **GABLE HIP/ASPHALT**
Ext: **VINYL SIDING**
Int: **DRYWALL**
Floor: **HARDWOOD/CARPET**
Heat: **OIL/FA DUCTED**
Bedrooms: **3** Baths: **1.5** Fixtures:
Extra Kitchens: Fireplaces:
A/C: **Yes 100.00 %** Generators:
Quality: **A1 AVG+10**
Com. Wall:
Size Adj: **0.9020** Base Rate: **RSA 80.00**
Bldg. Rate: **0.9821**
Sq. Foot Cost: **$ 78.57**

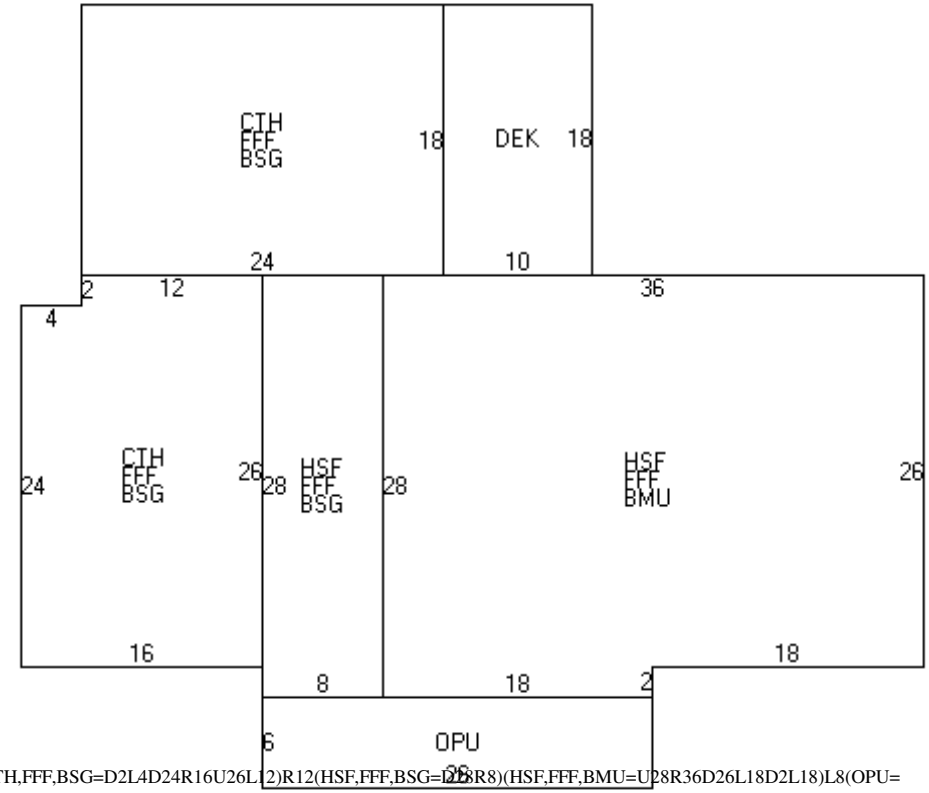

(CTH,FFF,BSG=D18L24)(CTH,FFF,BSG=D2L4D24R16U26L12)R12(HSF,FFF,BSG=D28R8)(HSF,FFF,BMU=U28R36D26L18D2L18)L8(OPU=D6R26)L14U34(DEK=R10U18)

BUILDING SUB AREA DETAILS

ID	Description	Area	Adj.	Effect.
FFF	FST FLR FIN	2036	1.00	2036
CTH	CATHEDRAL	840	0.10	84
BSG	BSMT GAR	1064	0.25	266
HSF	1/2 STRY FIN	1196	0.50	598
BMU	BSMNT	972	0.15	146
OPU	OPEN PORCH	156	0.15	23
DEK	DECK/ENTRANCE	180	0.10	18
GLA:	**2,634**	**6,444**		**3,171**

2013 BASE YEAR BUILDING VALUATION

Market Cost New:		**$ 249,145**
Year Built:		**2003**
Condition For Age:	AVERAGE	**8 %**
Physical:		
Functional:		
Economic:		
Temporary:		
Total Depreciation:		**8 %**
Building Value:		**$ 229,200**

OWNER INFORMATION

HENDGEN, STEVEN
GIANNUSA, VALERIE
24 SOUTH RD

BRENTWOOD, NH 03833

SALES HISTORY

Date	Book	Page	Type	Price	Grantor
03/14/2014	5518	0186	Q I	200,000	ROBB, THOMAS M

PICTURE

LISTING HISTORY

06/28/12	KCML	ADD A/C-LINOLIUM FLR- & (
05/14/03	BW	CK LISTING
05/12/03	BW	LIST FOR REVAL

NOTES

D-21133. BLUE.

EXTRA FEATURES VALUATION

Feature Type	Units	Lngth x Width	Size Adj	Rate	Cond	Market Value	Notes
FIREPLACE 1-1	1		100	3,000.00	100	3,000	
						3,000	

MUNICIPAL SOFTWARE BY AVITAR

KINGSTON ASSESSING OFFICE

PARCEL TOTAL TAXABLE VALUE

Year	Building	Features	Land
2014	$ 88,600	$ 3,000	$ 80,100
		Parcel Total:	$ 171,700
2015	$ 88,600	$ 3,000	$ 80,100
		Parcel Total:	$ 171,700
2016	**$ 88,600**	**$ 3,000**	**$ 80,100**
		Parcel Total:	**$ 171,700**

LAND VALUATION

Zone: SFRAG SFR AGR **Minimum Acreage:** 1.84 **Minimum Frontage:** 200 **Site:** **Driveway:** **Road:**

Land Type	Units	Base Rate	NC	Adj	Site	Road	DWay	Topography	Cond	Ad Valorem	SPI	R	Tax Value	Notes
1F RES	1.840 ac	80,000	E	100	100	100	100		100	80,000	0	N	80,000	
1F RES	0.050 ac	x 2,000	X	100					100	100	0	N	100	
	1.890 ac									80,100			**80,100**	

Map: 000R37 **Lot: 000008** **Sub: 000001** **Card: 1 of 1** **24 SOUTH RD** **KINGSTON** **Printed: 03/02/2016**

PICTURE

OWNER

HENDGEN, STEVEN
GIANNUSA, VALERIE
24 SOUTH RD

BRENTWOOD, NH 03833

TAXABLE DISTRICTS

District	Percentage

PERMITS

Date	Permit ID	Permit Type	Notes

BUILDING DETAILS

Model: **1.00 STORY FRAME RANCH**
Roof: **GABLE HIP/ASPHALT**
Ext: **VINYL SIDING**
Int: **DRYWALL**
Floor: **CARPET/LINOLEUM OR SIM**
Heat: **OIL/FA DUCTED**
Bedrooms: **2** Baths: **1.0** Fixtures:
Extra Kitchens: Fireplaces:
A/C: **Yes 100.00 %** Generators:
Quality: **A0 AVG**
Com. Wall:
Size Adj: **1.1934** Base Rate: **RSA 80.00**
Bldg. Rate: **1.1576**
Sq. Foot Cost: **$ 92.61**

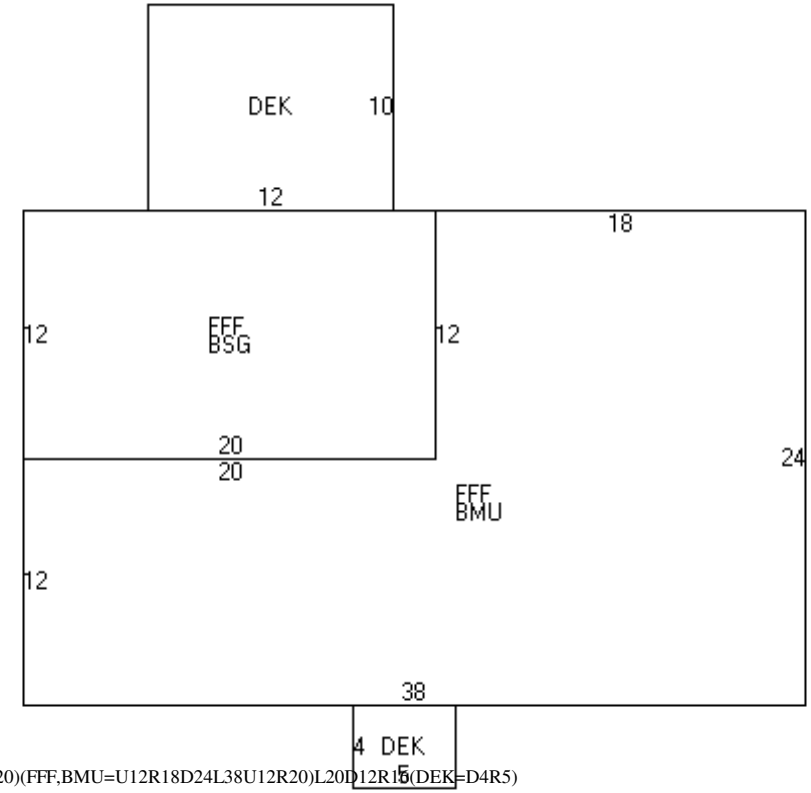

(DEK=D10L12)L6(FFF,BSG=D12R20)(FFF,BMU=U12R18D24L38U12R20)L20D12R15(DEK=D4R5)

BUILDING SUB AREA DETAILS

ID	Description	Area	Adj.	Effect.
DEK	DECK/ENTRANCE	140	0.10	14
FFF	FST FLR FIN	912	1.00	912
BSG	BSMT GAR	240	0.25	60
BMU	BSMNT	672	0.15	101
GLA:	**912**	**1,964**		**1,087**

2013 BASE YEAR BUILDING VALUATION

Market Cost New:		**$ 100,667**
Year Built:		**1991**
Condition For Age:	AVERAGE	**12 %**
Physical:		
Functional:		
Economic:		
Temporary:		
Total Depreciation:		**12 %**
Building Value:		**$ 88,600**

OWNER INFORMATION

DACEY, JENNINE
DACEY, TIMOTHY M.
33 SOUTH ROAD

BRENTWOOD, NH 03833

SALES HISTORY

Date	Book	Page	Type	Price	Grantor
12/12/2012	5387	1790	U I 20		ROUILLARD PATRICIA B,
05/28/1996	3157	0927	U I 38		ROUILLARD PATRICIA B,
01/10/1953	1274	0288	U I 82		BURTT, ELIZABETH

PICTURE

LISTING HISTORY

02/20/13	KCPU
06/29/12	KCM
05/19/03	BW
05/12/03	BW

NOTES

YELLOW. NVCHNG 2/13KC

EXTRA FEATURES VALUATION

Feature Type	Units	Lngth x Width	Size Adj	Rate	Cond	Market Value	Notes
FIREPLACE 1-1	1		100	3,000.00	100	3,000	
						3,000	

MUNICIPAL SOFTWARE BY AVITAR

KINGSTON ASSESSING OFFICE

PARCEL TOTAL TAXABLE VALUE

Year	Building	Features	Land
2014	$ 106,200	$ 3,000	$ 74,900
		Parcel Total:	$ 184,100
2015	$ 106,200	$ 3,000	$ 74,900
		Parcel Total:	$ 184,100
2016	**$ 106,200**	**$ 3,000**	**$ 74,900**
		Parcel Total:	**$ 184,100**

LAND VALUATION

Zone: SFRAG SFR AGR **Minimum Acreage:** 1.84 **Minimum Frontage:** 200 **Site:** **Driveway:** **Road:**

Land Type	Units	Base Rate	NC	Adj	Site	Road	DWay	Topography	Cond	Ad Valorem	SPI	R	Tax Value	Notes
1F RES	0.700 ac	74,900	E	100	100	100	100		100	74,900	0	N	74,900	
	0.700 ac									74,900			**74,900**	

Map: 000R37 **Lot: 000009** **Sub: 000000** **Card: 1 of 1** **17 SOUTH RD** **KINGSTON** **Printed: 03/02/2016**

PICTURE

OWNER

DACEY, JENNINE
DACEY, TIMOTHY M.
33 SOUTH ROAD

BRENTWOOD, NH 03833

TAXABLE DISTRICTS

District	Percentage

PERMITS

Date	Permit ID	Permit Type	Notes
11/09/12	5379-1055	WELL	WELL RELEASE
08/02/82	99008	SEPTIC	APPROVAL FOR CONSTRU

BUILDING DETAILS

Model: **2.00 STORY FRAME CONVENTION**
Roof: **GABLE HIP/ASPHALT**
Ext: **VINYL SIDING**
Int: **DRYWALL**
Floor: **LINOLEUM OR SIM/CARPET**
Heat: **OIL/HOT WATER**
Bedrooms: **3** Baths: **2.0** Fixtures:
Extra Kitchens: Fireplaces:
A/C: **No** Generators:
Quality: **A0 AVG**
Com. Wall:
Size Adj: **1.0362** Base Rate: **RSA 80.00**
Bldg. Rate: **0.9850**
Sq. Foot Cost: **$ 78.80**

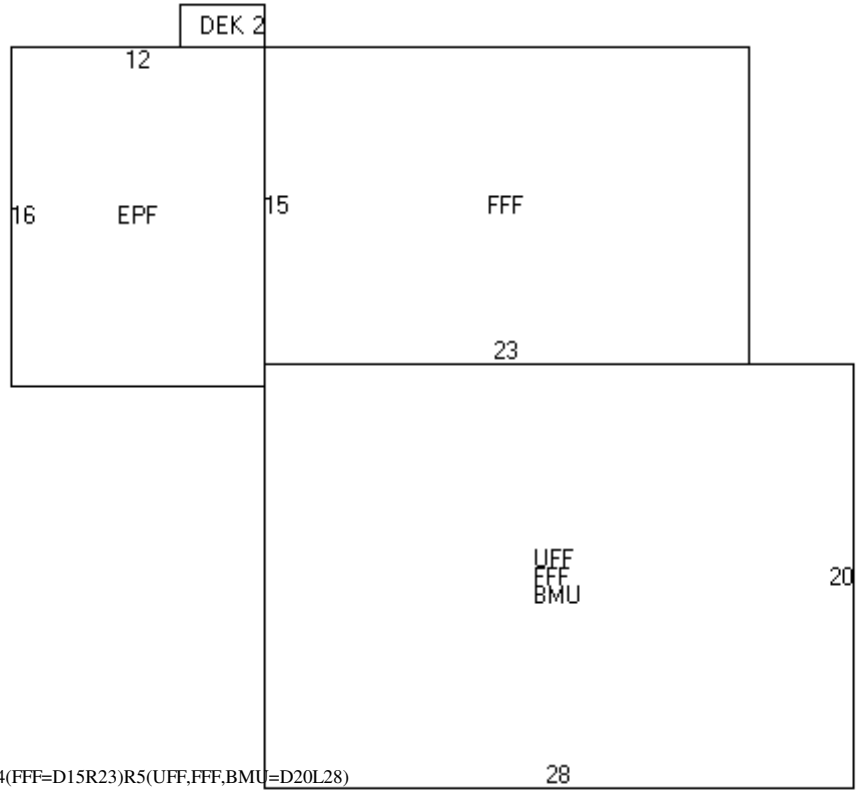

(EPF=U16R12)(DEK=U2L4)D2R4(FFF=D15R23)R5(UFF,FFF,BMU=D20L28)

BUILDING SUB AREA DETAILS

ID	Description	Area	Adj.	Effect.
EPF	ENCLSD PORCH	192	0.70	134
DEK	DECK/ENTRANCE	8	0.10	1
FFF	FST FLR FIN	905	1.00	905
UFF	UPPER FLR FIN	560	1.00	560
BMU	BSMNT	560	0.15	84
GLA:	**1,599**	**2,225**		**1,684**

2013 BASE YEAR BUILDING VALUATION

Market Cost New:		**$ 132,699**
Year Built:		**1951**
Condition For Age:	AVERAGE	**20 %**
Physical:		
Functional:		
Economic:		
Temporary:		
Total Depreciation:		**20 %**
Building Value:		**$ 106,200**

OWNER INFORMATION

TOWN OF KINGSTON

163 MAIN ST
PO BOX 716
KINGSTON, NH 03848-0716

SALES HISTORY

Date	Book	Page	Type	Price	Grantor

PICTURE

LISTING HISTORY

06/01/12 KCV
05/12/03 BW

NOTES

VACANT 80 X UNBUILD 25 = 20 CHG ATV HEARINGS

EXTRA FEATURES VALUATION

Feature Type	Units	Lngth x Width	Size Adj	Rate	Cond	Market Value	Notes

MUNICIPAL SOFTWARE BY AVITAR

KINGSTON ASSESSING OFFICE

PARCEL TOTAL TAXABLE VALUE

Year	Building	Features	Land
2014	$ 0	$ 0	$ 13,400
		Parcel Total:	$ 13,400
2015	$ 0	$ 0	$ 13,400
		Parcel Total:	$ 13,400
2016	**$ 0**	**$ 0**	**$ 13,400**
		Parcel Total:	**$ 13,400**

LAND VALUATION

Zone: SFRAG SFR AGR **Minimum Acreage:** 1.84 **Minimum Frontage:** 200 **Site:** **Driveway:** **Road:**

Land Type	Units	Base Rate	NC	Adj	Site	Road	DWay	Topography	Cond	Ad Valorem	SPI	R	Tax Value	Notes
EXEMPT-MUNIC	0.150 ac	67,075	E	100	100	100	100		20	13,400	0	N	13,400	VACANT
	0.150 ac									13,400			**13,400**	

PICTURE

OWNER

TOWN OF KINGSTON

163 MAIN ST
PO BOX 716
KINGSTON, NH 03848-0716

TAXABLE DISTRICTS

District	Percentage

PERMITS

Date	Permit ID	Permit Type	Notes

BUILDING DETAILS

Model:
Roof:
Ext:
Int:
Floor:
Heat:
Bedrooms: Baths: Fixtures:
Extra Kitchens: Fireplaces:
A/C: Generators:
Quality:
Com. Wall:
Stories:
Base Type:

BUILDING SUB AREA DETAILS

2013 BASE YEAR BUILDING VALUATION

Year Built:
Condition For Age: %
Physical:
Functional:
Economic:
Temporary:
%

OWNER INFORMATION

GAUDETTE, ROBERT A III
GAUDETTE, SUZANNE M
21 SOUTH RD

BRENTWOOD, NH 03833-5312

SALES HISTORY

Date	Book	Page	Type	Price	Grantor
08/12/2005	4530	1900	U I 20	284,000	WARNOCK

PICTURE

LISTING HISTORY

06/01/12 KCV
05/12/03 BW

NOTES

VACANT

EXTRA FEATURES VALUATION

Feature Type	Units	Lngth x Width	Size Adj	Rate	Cond	Market Value	Notes

MUNICIPAL SOFTWARE BY AVITAR

KINGSTON ASSESSING OFFICE

PARCEL TOTAL TAXABLE VALUE

Year	Building	Features	Land
2014	$ 0	$ 0	$ 400
		Parcel Total:	$ 400
2015	$ 0	$ 0	$ 400
		Parcel Total:	$ 400
2016	**$ 0**	**$ 0**	**$ 400**
		Parcel Total:	**$ 400**

LAND VALUATION

Zone: SFRAG SFR AGR **Minimum Acreage:** 1.84 **Minimum Frontage:** 200 **Site:** **Driveway:** **Road:**

Land Type	Units	Base Rate	NC	Adj	Site	Road	DWay	Topography	Cond	Ad Valorem	SPI	R	Tax Value	Notes
1F RES	0.180 ac	x 2,000	X	100	100	100	100		100	400	0	N	400	
	0.180 ac									400			**400**	

PICTURE

OWNER

GAUDETTE, ROBERT A III
GAUDETTE, SUZANNE M
21 SOUTH RD

BRENTWOOD, NH 03833-5312

TAXABLE DISTRICTS

District	Percentage

PERMITS

Date	Permit ID	Permit Type	Notes

BUILDING DETAILS

Model:
Roof:
Ext:
Int:
Floor:
Heat:
Bedrooms: Baths: Fixtures:
Extra Kitchens: Fireplaces:
A/C: Generators:
Quality:
Com. Wall:
Stories:

Base Type:

BUILDING SUB AREA DETAILS

2013 BASE YEAR BUILDING VALUATION

Year Built:
Condition For Age: %
Physical:
Functional:
Economic:
Temporary:

%

OWNER INFORMATION

MCNAUGHTON, ARTHUR F III /LISE
TRSTS. OF MCNAUGHTON LIVING TR
11 SOUTH ROAD

BRENTWOOD, NH 03833

SALES HISTORY

Date	Book	Page	Type	Price	Grantor
05/12/1993	2982	562	U V 20	70,000	WIGHT, ROBERT

PICTURE

LISTING HISTORY

06/01/12 KCV
03/05/09 FRR
05/12/03 BW

NOTES

CHANGED STREET NUMBER FROM 7 TO 11. N/C FRR 3/09

EXTRA FEATURES VALUATION

Feature Type	Units	Lngth x Width	Size Adj	Rate	Cond	Market Value	Notes

MUNICIPAL SOFTWARE BY AVITAR

KINGSTON ASSESSING OFFICE

PARCEL TOTAL TAXABLE VALUE

Year	Building	Features	Land
2014	$ 0	$ 0	$ 0
		Parcel Total:	$ 0
2015	$ 0	$ 0	$ 0
		Parcel Total:	$ 0
2016	**$ 0**	**$ 0**	**$ 0**
		Parcel Total:	**$ 0**

LAND VALUATION

Zone: SFRAG SFR AGR **Minimum Acreage:** 1.84 **Minimum Frontage:** 200 **Site:** **Driveway:** **Road:**

Land Type	Units	Base Rate	NC	Adj	Site	Road	DWay	Topography	Cond	Ad Valorem	SPI	R	Tax Value	Notes
1F RES	0.020 ac	x 2,000	X	100	100	100	100		100	0	0	N	0	
	0.020 ac									0			**0**	

PICTURE

OWNER

MCNAUGHTON, ARTHUR F III /LISE
TRSTS. OF MCNAUGHTON LIVING TR
11 SOUTH ROAD

BRENTWOOD, NH 03833

TAXABLE DISTRICTS

District	Percentage

PERMITS

Date	Permit ID	Permit Type	Notes

BUILDING DETAILS

Model:
Roof:
Ext:
Int:
Floor:
Heat:
Bedrooms: Baths: Fixtures:
Extra Kitchens: Fireplaces:
A/C: Generators:
Quality:
Com. Wall:
Stories:
Base Type:

BUILDING SUB AREA DETAILS

2013 BASE YEAR BUILDING VALUATION

Year Built:
Condition For Age: %
Physical:
Functional:
Economic:
Temporary:
%

OWNER INFORMATION

MYERS, R. KELLY

5 SOUTH RD

BRENTWOOD, NH 03833

SALES HISTORY

Date	Book	Page	Type	Price	Grantor
11/01/2013	5491	2836	U I 39		MYERS, R. KELLY
12/22/2011	5273	2032	U V 20		POWERS, JANET L.
06/24/2010	5121	214	U V 20		BRUNO
03/02/2007	4772	1211	U V 20		BRUNO
11/20/2003	4195	1673	U V 20	500	O'SHEA

PICTURE

LISTING HISTORY

06/01/12 KCV
05/12/03 BW

NOTES

O'SHEA LIFE ESTATE RELINQUISHED VIA V. 5234 P. 0271 8/2/11.

EXTRA FEATURES VALUATION

Feature Type	Units	Lngth x Width	Size Adj	Rate	Cond	Market Value	Notes

MUNICIPAL SOFTWARE BY AVITAR

KINGSTON ASSESSING OFFICE

PARCEL TOTAL TAXABLE VALUE

Year	Building	Features	Land
2014	$ 0	$ 0	$ 100
		Parcel Total:	$ 100
2015	$ 0	$ 0	$ 100
		Parcel Total:	$ 100
2016	**$ 0**	**$ 0**	**$ 100**
		Parcel Total:	**$ 100**

LAND VALUATION

Zone: SFRAG SFR AGR **Minimum Acreage:** 1.84 **Minimum Frontage:** 200 **Site:** **Driveway:** **Road:**

Land Type	Units	Base Rate	NC	Adj	Site	Road	DWay	Topography	Cond	Ad Valorem	SPI	R	Tax Value	Notes
1F RES	0.050 ac	x 2,000	X	100	100	100	100		100	100	0	N	100	
	0.050 ac									100			**100**	

PICTURE

OWNER

MYERS, R. KELLY

5 SOUTH RD

BRENTWOOD, NH 03833

TAXABLE DISTRICTS

District	Percentage

PERMITS

Date	Permit ID	Permit Type	Notes
10/04/11	CA20111062	SEPTIC	APPROVAL FOR CONSTRU

BUILDING DETAILS

Model:
Roof:
Ext:
Int:
Floor:
Heat:
Bedrooms: Baths: Fixtures:
Extra Kitchens: Fireplaces:
A/C: Generators:
Quality:
Com. Wall:
Stories:
Base Type:

BUILDING SUB AREA DETAILS

2013 BASE YEAR BUILDING VALUATION

Year Built:
Condition For Age: %
Physical:
Functional:
Economic:
Temporary:
%

OWNER INFORMATION

BRUNO, DYAN
BRUNO, WAYNE
4 ACOX LN

BRENTWOOD, NH 03833

SALES HISTORY

Date	Book	Page	Type	Price	Grantor

PICTURE

LISTING HISTORY

06/01/12 KCV
05/12/03 BW

NOTES

VACANT

EXTRA FEATURES VALUATION

Feature Type	Units	Lngth x Width	Size Adj	Rate	Cond	Market Value	Notes

MUNICIPAL SOFTWARE BY AVITAR

KINGSTON ASSESSING OFFICE

PARCEL TOTAL TAXABLE VALUE

Year	Building	Features	Land
2014	$ 0	$ 0	$ 100
		Parcel Total:	$ 100
2015	$ 0	$ 0	$ 100
		Parcel Total:	$ 100
2016	**$ 0**	**$ 0**	**$ 100**
		Parcel Total:	**$ 100**

LAND VALUATION

Zone: SFRAG SFR AGR **Minimum Acreage:** 1.84 **Minimum Frontage:** 200 **Site:** **Driveway:** **Road:**

Land Type	Units	Base Rate	NC	Adj	Site	Road	DWay	Topography	Cond	Ad Valorem	SPI	R	Tax Value	Notes
1F RES	0.070 ac	x 2,000	X	100	100	100	100		100	100	0	N	100	
	0.070 ac									100			**100**	

PICTURE

OWNER

BRUNO, DYAN
BRUNO, WAYNE
4 ACOX LN

BRENTWOOD, NH 03833

TAXABLE DISTRICTS

District	Percentage

PERMITS

Date	Permit ID	Permit Type	Notes

BUILDING DETAILS

Model:
Roof:
Ext:
Int:
Floor:
Heat:
Bedrooms: Baths: Fixtures:
Extra Kitchens: Fireplaces:
A/C: Generators:
Quality:
Com. Wall:
Stories:
Base Type:

BUILDING SUB AREA DETAILS

2013 BASE YEAR BUILDING VALUATION

Year Built:
Condition For Age: %
Physical:
Functional:
Economic:
Temporary:
%

OWNER INFORMATION

SCHERMERHORN, DR. JOHN J.
SCHERMERHORN, INGE L.
1 SOUTH RD

KINGSTON, NH 03848

SALES HISTORY

Date	Book	Page	Type	Price	Grantor
04/23/2004	4275	1308	Q I	302,530	BARRETT

PICTURE

LISTING HISTORY

06/29/12 KCM
03/22/12 KCPU
05/13/03 BW

NOTES

TAN. GARAGE IS IN BRENTWOOD. ADDITION 100% COMP ADD GAS FPL & GAZEBO 3/12KC

EXTRA FEATURES VALUATION

Feature Type	Units	Lngth x Width	Size Adj	Rate	Cond	Market Value	Notes
FIREPLACE 1-1	1		100	3,000.00	100	3,000	
IN GRND POOL/VINYL	800	40 x 20	80	38.00	70	17,024	
GAZEBO	196		142	14.00	100	3,896	
FIREPLACE GAS	1		100	2,500.00	100	2,500	
						26,400	

MUNICIPAL SOFTWARE BY AVITAR

KINGSTON ASSESSING OFFICE

PARCEL TOTAL TAXABLE VALUE

Year	Building	Features	Land
2014	$ 163,400	$ 26,400	$ 66,300
		Parcel Total:	$ 256,100
2015	$ 163,400	$ 26,400	$ 66,300
		Parcel Total:	$ 256,100
2016	**$ 163,400**	**$ 26,400**	**$ 66,300**
		Parcel Total:	**$ 256,100**

LAND VALUATION

Zone: SFRAG SFR AGR **Minimum Acreage:** 1.84 **Minimum Frontage:** 200 **Site:** **Driveway:** **Road:**

Land Type	Units	Base Rate	NC	Adj	Site	Road	DWay	Topography	Cond	Ad Valorem	SPI	R	Tax Value	Notes
1F RES	0.100 ac	66,300	E	100	100	100	100		100	66,300	0	N	66,300	
	0.100 ac									66,300			**66,300**	

Map: 000R37 **Lot: 000015** **Sub: 000000** **Card: 1 of 1** **1 SOUTH RD** **KINGSTON** **Printed: 03/02/2016**

PICTURE

OWNER

SCHERMERHORN, DR. JOHN J.
SCHERMERHORN, INGE L.
1 SOUTH RD

KINGSTON, NH 03848

TAXABLE DISTRICTS

District	Percentage

PERMITS

Date	Permit ID	Permit Type	Notes
02/07/12	R37-15	ELECTRIC PERMIT	WIRE ADDITION
11/17/11	R37-15	ADDITION	18 X 15 ADDITION
11/10/11	R37-15	VARIANCE/SP. EXC.	1' 8" VARIANCE GRANTED

BUILDING DETAILS

Model: **2.00 STORY FRAME CONVENTION**
Roof: **GABLE HIP/ASPHALT**
Ext: **VINYL SIDING**
Int: **DRYWALL**
Floor: **HARDWOOD/CARPET**
Heat: **OIL/HOT WATER**
Bedrooms: **3** Baths: **2.0** Fixtures:
Extra Kitchens: Fireplaces:
A/C: **No** Generators:
Quality: **A0 AVG**
Com. Wall:
Size Adj: **0.9315** Base Rate: **RSA 80.00**
Bldg. Rate: **0.8946**
Sq. Foot Cost: **$ 71.57**

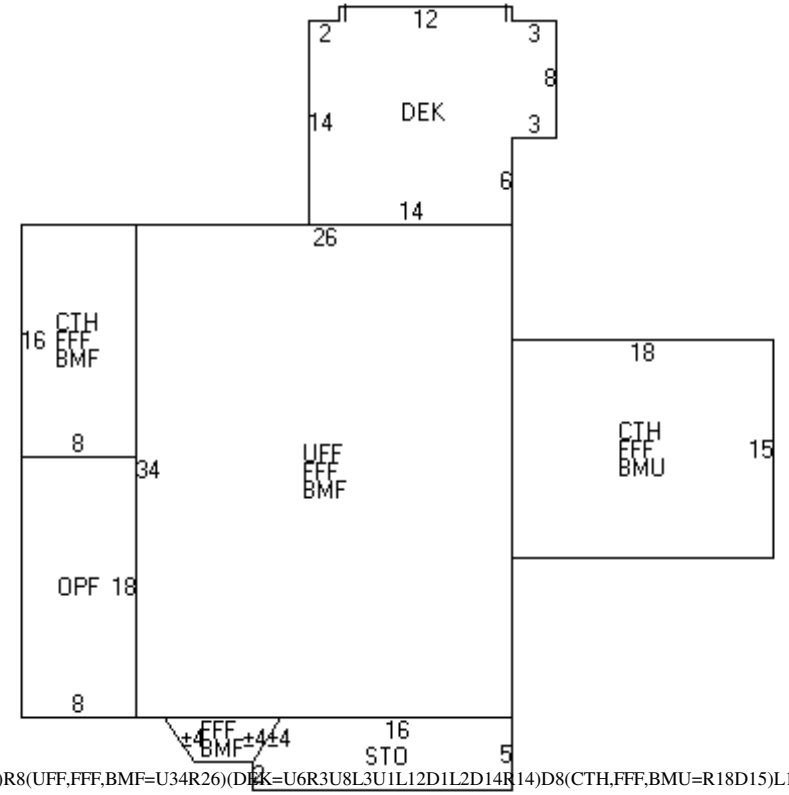

(CTH,FFF,BMF=D16R8)(OPF=D18L8)R8(UFF,FFF,BMF=U34R26)(DEK=U6R3U8L3U1L12D1L2D14R14)D8(CTH,FFF,BMU=R18D15)L18D11(STO=D5L18U2[R2U3]R16)L16(FFF,BMF=[D3L2]L4[L2U3]R8)

BUILDING SUB AREA DETAILS

ID	Description	Area	Adj.	Effect.
BMU	BSMNT	270	0.15	41
CTH	CATHEDRAL	398	0.10	40
FFF	FST FLR FIN	1300	1.00	1300
BMF	BSMNT FINISHED	1030	0.30	309
OPF	OPEN PORCH FIN	144	0.25	36
UFF	UPPER FLR FIN	884	1.00	884
DEK	DECK/ENTRANCE	232	0.10	23
STO	STORAGE AREA	87	0.25	22
GLA:	**2,184**	**4,345**		**2,655**

2013 BASE YEAR BUILDING VALUATION

Market Cost New:		**$ 190,018**
Year Built:		**1980**
Condition For Age:	AVERAGE	**14 %**
Physical:		
Functional:		
Economic:		
Temporary:		
Total Depreciation:		**14 %**
Building Value:		**$ 163,400**

OWNER INFORMATION

HART, DIANE J
DEMERS, RAYMOND J.
P O BOX 701

KINGSTON, NH 03848-0701

SALES HISTORY

Date	Book	Page	Type	Price	Grantor
10/10/2003	4170	2437	U I 44	100	HART

PICTURE

LISTING HISTORY

06/27/12 KCML
03/23/11 KCPU
03/05/09 FRR
05/12/03 BW

NOTES

BROWN, REFUSED ENTRENCE. N/C FRR 3/09, EST UFF 100% COMP 3/11KC, CORRECT SKETCH-INFO-&EXTRA FEATURES 6/12KC

EXTRA FEATURES VALUATION

Feature Type	Units	Lngth x Width	Size Adj	Rate	Cond	Market Value	Notes
GARAGE-2STRY	624	26 x 24	86	40.00	80	17,172	
LEAN-TO	128	8 x 16	185	3.00	100	710	
CHICKEN COOPS	48	6 x 8	393	7.25	70	957	
						18,800	

MUNICIPAL SOFTWARE BY AVITAR

KINGSTON ASSESSING OFFICE

PARCEL TOTAL TAXABLE VALUE

Year	Building	Features	Land
2014	$ 133,200	$ 18,800	$ 80,600
		Parcel Total:	$ 232,600
2015	$ 133,200	$ 18,800	$ 80,600
		Parcel Total:	$ 232,600
2016	**$ 133,200**	**$ 18,800**	**$ 80,600**
		Parcel Total:	**$ 232,600**

LAND VALUATION

Zone: SFRAG SFR AGR **Minimum Acreage:** 1.84 **Minimum Frontage:** 200 **Site:** **Driveway:** **Road:**

Land Type	Units	Base Rate	NC	Adj	Site	Road	DWay	Topography	Cond	Ad Valorem	SPI	R	Tax Value	Notes
1F RES	1.840 ac	80,000	E	100	100	100	100		100	80,000	0	N	80,000	
1F RES	0.290 ac	x 2,000	X	100					100	600	0	N	600	
	2.130 ac									80,600			**80,600**	

Map: 000R37 **Lot: 00006A** **Sub: 000000** **Card: 1 of 1** **16 SOUTH RD** **KINGSTON** **Printed: 03/02/2016**

PICTURE

OWNER

HART, DIANE J
DEMERS, RAYMOND J.
P O BOX 701

KINGSTON, NH 03848-0701

TAXABLE DISTRICTS

District	Percentage

PERMITS

Date	Permit ID	Permit Type	Notes

BUILDING DETAILS

Model: **2.00 STORY FRAME LOG CABIN**
Roof: **GAMBREL/ASPHALT**
Ext: **LOGS**
Int: **CUSTOM WOOD**
Floor: **CARPET/HARDWOOD**
Heat: **OIL/HOT WATER**
Bedrooms: **3** Baths: **1.5** Fixtures:
Extra Kitchens: Fireplaces:
A/C: **No** Generators:
Quality: **A0 AVG**
Com. Wall:
Size Adj: **0.9623** Base Rate: **RSA 80.00**
Bldg. Rate: **0.9525**
Sq. Foot Cost: **$ 76.20**

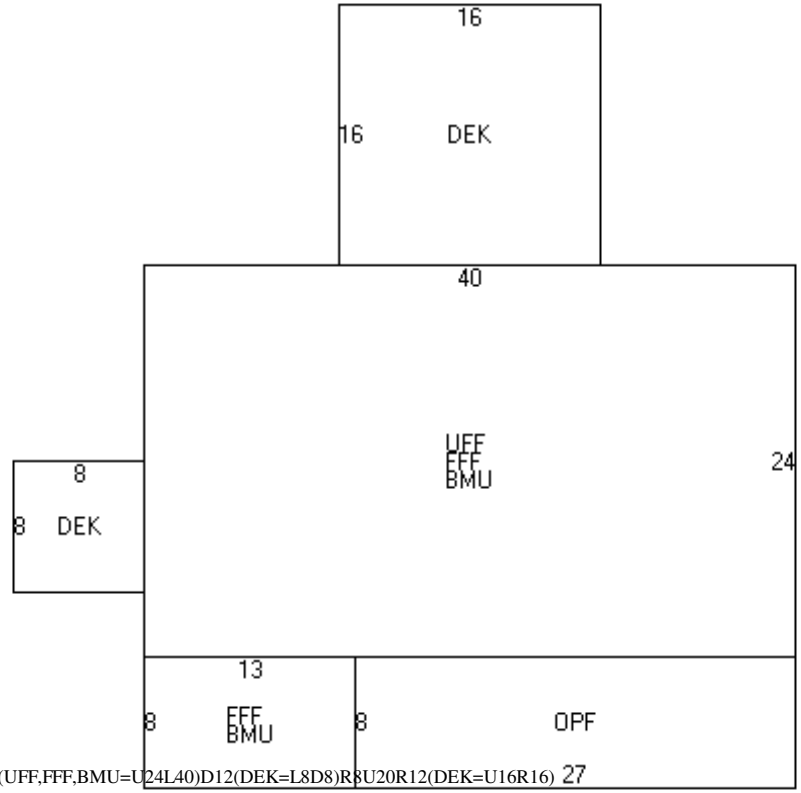

(FFF,BMU=U8R13)(OPF=D8R27)U8(UFF,FFF,BMU=U24L40)D12(DEK=L8D8)R8U20R12(DEK=U16R16)

BUILDING SUB AREA DETAILS

ID	Description	Area	Adj.	Effect.
FFF	FST FLR FIN	1064	1.00	1064
BMU	BSMNT	1064	0.15	160
OPF	OPEN PORCH FIN	216	0.25	54
UFF	UPPER FLR FIN	960	1.00	960
DEK	DECK/ENTRANCE	320	0.10	32
GLA:	**2,024**	**3,624**		**2,270**

2013 BASE YEAR BUILDING VALUATION

Market Cost New:		**$ 172,974**
Year Built:		**1960**
Condition For Age:	AVERAGE	**18 %**
Physical:		
Functional:	GAMBREL	**5 %**
Economic:		
Temporary:		
Total Depreciation:		**23 %**
Building Value:		**$ 133,200**

OWNER INFORMATION

COTE, PAUL G
COTE, SHEREE-LEE
14 SOUTH RD

EXETER, NH 03833

SALES HISTORY

Date	Book	Page	Type	Price	Grantor

PICTURE

LISTING HISTORY

06/28/12 KCML
11/10/03 BJLO
05/12/03 BW

NOTES

BROWN CHG AT HEARINGS, CORRECT SKETCH & INFO 6/12KC 9/9/13
HEARING ADJUST SKETCH FRONT ENTRY

EXTRA FEATURES VALUATION

Feature Type	Units	Lngth x Width	Size Adj	Rate	Cond	Market Value	Notes

MUNICIPAL SOFTWARE BY AVITAR

KINGSTON ASSESSING OFFICE

PARCEL TOTAL TAXABLE VALUE

Year	Building	Features	Land
2014	$ 190,700	$ 0	$ 81,500
		Parcel Total:	$ 272,200
2015	$ 190,700	$ 0	$ 81,500
		Parcel Total:	$ 272,200
2016	**$ 190,700**	**$ 0**	**$ 81,500**
		Parcel Total:	**$ 272,200**

LAND VALUATION

Zone: SFRAG SFR AGR **Minimum Acreage:** 1.84 **Minimum Frontage:** 200 **Site:** **Driveway:** **Road:**

Land Type	Units	Base Rate	NC	Adj	Site	Road	DWay	Topography	Cond	Ad Valorem	SPI	R	Tax Value	Notes
1F RES	1.840 ac	80,000	E	100	100	100	100		100	80,000	0	N	80,000	
1F RES	0.730 ac	x 2,000	X	100					100	1,500	0	N	1,500	
	2.570 ac									81,500			**81,500**	

Map: 000R37 **Lot: 00006B** **Sub: 000000** **Card: 1 of 1** **14 SOUTH RD** **KINGSTON** **Printed: 03/02/2016**

PICTURE

OWNER

COTE, PAUL G
COTE, SHEREE-LEE
14 SOUTH RD

EXETER, NH 03833

TAXABLE DISTRICTS

District	Percentage

PERMITS

Date	Permit ID	Permit Type	Notes

BUILDING DETAILS

Model: **2.00 STORY FRAME COLONIAL**
Roof: **GABLE HIP/ASPHALT**
Ext: **CEDAR/REDWD**
Int: **DRYWALL**
Floor: **LINOLEUM OR SIM/CARPET**
Heat: **OIL/HOT WATER**
Bedrooms: **4** Baths: **1.5** Fixtures:
Extra Kitchens: Fireplaces:
A/C: **No** Generators:
Quality: **A1 AVG+10**
Com. Wall:
Size Adj: **0.9160** Base Rate: **RSA 80.00**
Bldg. Rate: **0.9776**
Sq. Foot Cost: **$ 78.21**

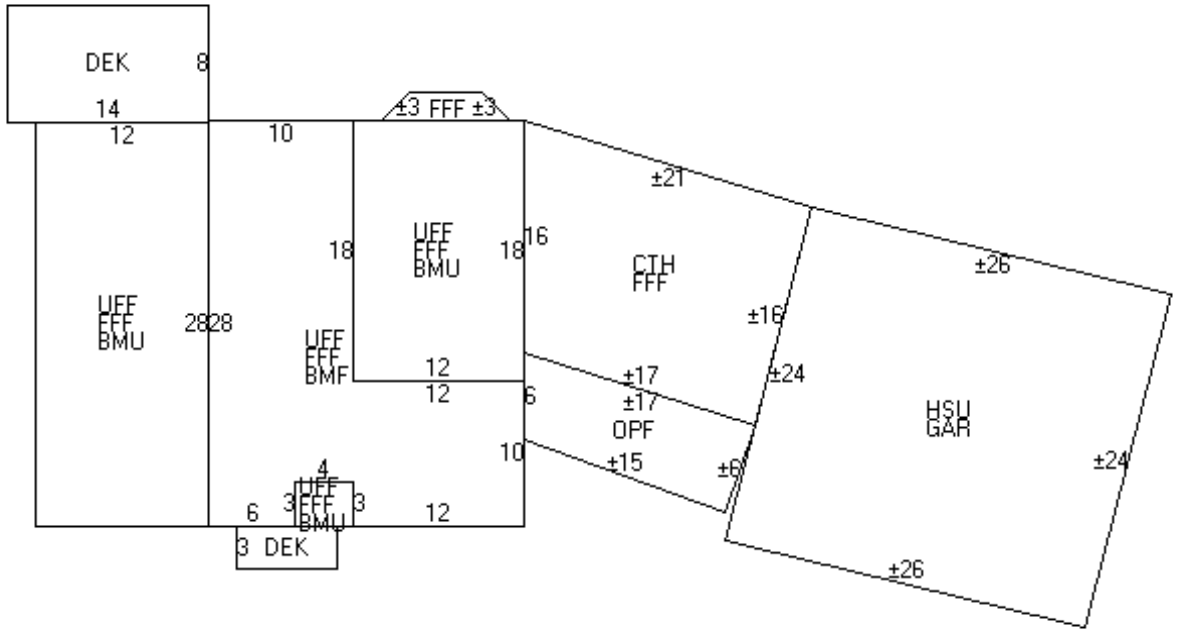

(DEK=D3R7)L9U39)(DEK=D8L14)R2(UFF,FFF,BMU=R12D28)(UFF,FFF,BMF=R6U3R4D3R12U10L12U18L10D28)R6(UFF,FFF,BMU=U3R4)U7(UFF,FFF,BMU=R12U18)L1(FFF=[U2L2]L5[L2D2]R9)R1(CTH,FFF=[R20D6][D15L4][L16U5]U16)D16(OPF=[R16D5][D6L2][L14U5]U6)R14D13(HSU,GAR=[D6R25][R6U23][U6L25][L6D23])

BUILDING SUB AREA DETAILS

ID	Description	Area	Adj.	Effect.
DEK	DECK/ENTRANCE	133	0.10	13
UFF	UPPER FLR FIN	952	1.00	952
FFF	FST FLR FIN	1256	1.00	1256
BMU	BSMNT	564	0.15	85
BMF	BSMNT FINISHED	388	0.30	116
CTH	CATHEDRAL	290	0.10	29
OPF	OPEN PORCH FIN	95	0.25	24
HSU	1/2 STRY UNFIN	611	0.25	153
GAR	GARAGE	611	0.45	275
GLA:	**2,208**	**4,900**		**2,903**

2013 BASE YEAR BUILDING VALUATION

Market Cost New:		**$ 227,044**
Year Built:		**1970**
Condition For Age:	AVERAGE	**16 %**
Physical:		
Functional:		
Economic:		
Temporary:		
Total Depreciation:		**16 %**
Building Value:		**$ 190,700**

OWNER INFORMATION

FORBES, DARRELL

12 SOUTH RD

BRENTWOOD, NH 03833

SALES HISTORY

Date	Book	Page	Type	Price	Grantor
06/29/2007	4817	1377	U I 23		FORBES
01/03/2003	3923	2369	Q I	335,100	SCIACCA, TIMOTHY & SHE

PICTURE

LISTING HISTORY

05/04/15	FSAB	2014 ABATEMENT
06/28/12	KCM	
03/21/12	KCPU	
03/23/11	KCPU	
04/15/10	KCX	
02/26/09	FRR	
04/15/08	KCX	
04/20/07	JARX	

NOTES

BRICK/YELLOW, CHK04 FOR DECK. GAR APPROX. 60% COMP CHK 05, 3/05 ROOF SIDING UNFIN, CHK 06-BW. NC CK 07 FOR FIN GAR JAR 03/06. NO CH ON GAR CK 08 JAR 4/07, N/C TO GAR CHK09 FOR FIN 4/08KC.CHK 2011 FOR GAR/OPU COMP, NEW PIC #114 4/10KC, CHNG ROOF TYPE, GAR 90% CHK 2012 FOR FIN 3/11KC, GAR COMP 3/12KC 5/4/15 2014 ABATEMENT TO CORRECT PHYSICAL DESCRIPTION

EXTRA FEATURES VALUATION

Feature Type	Units	Lngth x Width	Size Adj	Rate	Cond	Market Value	Notes
FIREPLACE 1-1	1		100	3,000.00	100	3,000	
						3,000	

MUNICIPAL SOFTWARE BY AVITAR

KINGSTON ASSESSING OFFICE

PARCEL TOTAL TAXABLE VALUE

Year	Building	Features	Land
2014	$ 292,200	$ 15,100	$ 82,700
		Parcel Total:	$ 390,000
2015	$ 279,200	$ 3,000	$ 82,700
		Parcel Total:	$ 364,900
2016	**$ 279,200**	**$ 3,000**	**$ 82,700**
		Parcel Total:	**$ 364,900**

LAND VALUATION

Zone: SFRAG SFR AGR **Minimum Acreage:** 1.84 **Minimum Frontage:** 200 **Site:** **Driveway:** **Road:**

Land Type	Units	Base Rate	NC	Adj	Site	Road	DWay	Topography	Cond	Ad Valorem	SPI	R	Tax Value	Notes
1F RES	1.840 ac	80,000	E	100	100	100	100		100	80,000	0	N	80,000	
1F RES	1.330 ac	x 2,000	X	100					100	2,700	0	N	2,700	
	3.170 ac									82,700			**82,700**	

Map: 000R37 Lot: 00006C Sub: 000000 Card: 1 of 1 12 SOUTH RD KINGSTON Printed: 03/02/2016

PICTURE

OWNER

FORBES, DARRELL

12 SOUTH RD

BRENTWOOD, NH 03833

TAXABLE DISTRICTS

District	Percentage

PERMITS

Date	Permit ID	Permit Type	Notes
05/13/03	R37-6C-1	BUILDING	GARAGE

BUILDING DETAILS

Model: **2.00 STORY FRAME CONVENTION**
Roof: **GABLE HIP/PREFAB METALS**
Ext: **BRK VENEER/VINYL SIDING**
Int: **DRYWALL**
Floor: **HARDWOOD/CARPET**
Heat: **OIL/HOT WATER**
Bedrooms: **4** Baths: **2.0** Fixtures:
Extra Kitchens: Fireplaces:
A/C: **No** Generators:
Quality: **A1 AVG+10**
Com. Wall:
Size Adj: **0.8624** Base Rate: **RSA 80.00**
Bldg. Rate: **0.9576**
Sq. Foot Cost: **$ 76.60**

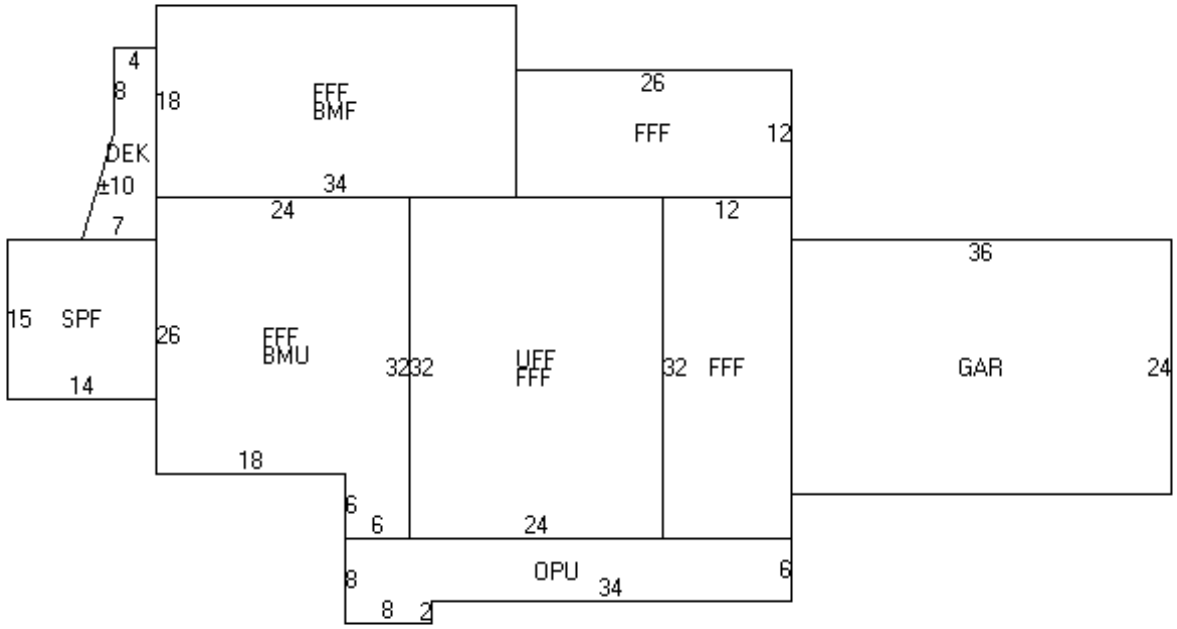

(SPF=L14U15)R7(DEK=[U10R3]U8R4D18L7)R7U22(FFF,BMF=D18R34)L34(FFF,BMU=D26R18D6R6U32L24)R24(UFF,FFF=D32R24)(FFF=U32R12)(FFF=U12L26)D16R26(GAR=R36D24)L36D4(OPU=D6L34D2L8U8R42)

BUILDING SUB AREA DETAILS

ID	Description	Area	Adj.	Effect.
SPF	SCREEN PORCH	210	0.30	63
DEK	DECK/ENTRANCE	87	0.10	9
BMF	BSMNT FINISHED	612	0.30	184
UFF	UPPER FLR FIN	768	1.00	768
FFF	FST FLR FIN	2736	1.00	2736
BMU	BSMNT	660	0.15	99
GAR	GARAGE	864	0.45	389
OPU	OPEN PORCH	268	0.15	40
GLA:	**3,504**	**6,205**		**4,288**

2013 BASE YEAR BUILDING VALUATION

Market Cost New:		**$ 328,461**
Year Built:		**1979**
Condition For Age:	AVERAGE	**15 %**
Physical:		
Functional:		
Economic:		
Temporary:		
Total Depreciation:		**15 %**
Building Value:		**$ 279,200**

OWNER INFORMATION

BELL, HOLLY A

10 SOUTH RD

BRENTWOOD, NH 03833

SALES HISTORY

Date	Book	Page	Type	Price	Grantor
06/10/1998	3299	1723	U I 82		KLINE, GARY J

PICTURE

LISTING HISTORY

06/28/12 KCM
06/02/09 FRR
06/02/03 KJ
05/12/03 BW

NOTES

GREY/STONE. D-7227. DECK AND INGROUND POOL GONE FRR 6/09. WOOD SHOP 2010. CHNG SIDING, CORRECT EXTRA FEATURES 6/12KC

EXTRA FEATURES VALUATION

Feature Type	Units	Lngth x Width	Size Adj	Rate	Cond	Market Value	Notes
FIREPLACE 1-1	1		100	3,000.00	100	3,000	
						3,000	

MUNICIPAL SOFTWARE BY AVITAR

KINGSTON ASSESSING OFFICE

PARCEL TOTAL TAXABLE VALUE

Year	Building	Features	Land
2014	$ 239,500	$ 3,000	$ 83,300
		Parcel Total:	$ 325,800
2015	$ 239,500	$ 3,000	$ 83,300
		Parcel Total:	$ 325,800
2016	**$ 239,500**	**$ 3,000**	**$ 83,300**
		Parcel Total:	**$ 325,800**

LAND VALUATION

Zone: SFRAG SFR AGR **Minimum Acreage:** 1.84 **Minimum Frontage:** 200 **Site:** **Driveway:** **Road:**

Land Type	Units	Base Rate	NC	Adj	Site	Road	DWay	Topography	Cond	Ad Valorem	SPI	R	Tax Value	Notes
1F RES	1.840 ac	80,000	E	100	100	100	100		100	80,000	0	N	80,000	
1F RES	1.650 ac	x 2,000	X	100					100	3,300	0	N	3,300	
	3.490 ac									83,300			**83,300**	

Map: 000R37 **Lot: 00006D** **Sub: 000000** **Card: 1 of 1** **10 SOUTH RD** **KINGSTON** **Printed: 03/02/2016**

PICTURE

OWNER

BELL, HOLLY A

10 SOUTH RD

BRENTWOOD, NH 03833

TAXABLE DISTRICTS

District	Percentage

PERMITS

Date	Permit ID	Permit Type	Notes

BUILDING DETAILS

Model: **1.75 STORY FRAME COLONIAL**
Roof: **GABLE HIP/ASPHALT**
Ext: **CEDAR/REDWD/STN ON MASONRY**
Int: **DRYWALL**
Floor: **HARD TILE/CARPET**
Heat: **OIL/HOT WATER**
Bedrooms: **4** Baths: **2.5** Fixtures:
Extra Kitchens: Fireplaces:
A/C: **No** Generators:
Quality: **A2 AVG+20**
Com. Wall:
Size Adj: **0.9088** Base Rate: **RSA 80.00**
Bldg. Rate: **1.1336**
Sq. Foot Cost: **$ 90.69**

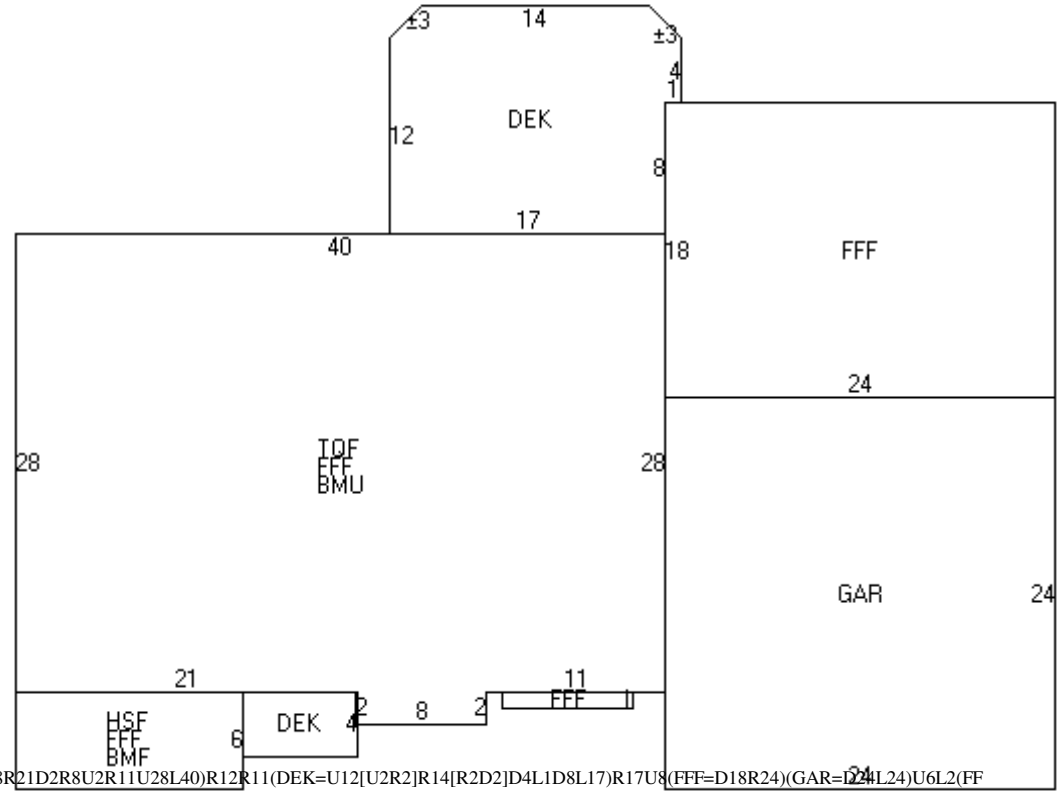

(TQF,FFF,BMU=D28R21D2R8U2R11U28L40)R12R11(DEK=U12[U2R2]R14[R2D2]D4L1D8L17)R17U8(FFF=D18R24)(GAR=D24L24)U6L2(FFF=D1L8)U1L1D2L8U2(DEK=D4L7)U4(HSF,FFF,BMF=D6L14)

BUILDING SUB AREA DETAILS

ID	Description	Area	Adj.	Effect.
FFF	FST FLR FIN	1660	1.00	1660
DEK	DECK/ENTRANCE	268	0.10	27
HSF	1/2 STRY FIN	84	0.50	42
TQF	3/4 STRY FIN	1136	0.75	852
BMU	BSMNT	1136	0.15	170
GAR	GARAGE	576	0.45	259
BMF	BSMNT FINISHED	84	0.30	25
GLA:	**2,554**	**4,944**		**3,035**

2013 BASE YEAR BUILDING VALUATION

Market Cost New:		**$ 275,244**
Year Built:		**1986**
Condition For Age:	AVERAGE	**13 %**
Physical:		
Functional:		
Economic:		
Temporary:		
Total Depreciation:		**13 %**
Building Value:		**$ 239,500**

OWNER INFORMATION

CYNEWSKI, PATRICIA A., TR
PATRICIA A. CYNEWSKI REV TR
8 SOUTH RD

EXETER, NH 03833-3152

SALES HISTORY

Date	Book	Page	Type	Price	Grantor
01/25/2008	4880	1958	U I 38		CYNEWSKI

PICTURE

LISTING HISTORY

06/28/12 KCM
03/01/05 BW O
05/12/03 BW

NOTES

WHITE, 3/05 P/U GAR(W/ HEAT+ELEC)-BW, CORRECT SKETCH, ADD PTO & A/C & IG POOL 6/12KC

EXTRA FEATURES VALUATION

Feature Type	Units	Lngth x Width	Size Adj	Rate	Cond	Market Value	Notes
FIREPLACE 1-1	1		100	3,000.00	100	3,000	
BARN /LOFT	1,200	30 x 40	73	18.00	80	12,614	
GARAGE /ATTIC	768	32 x 24	81	35.00	100	21,773	
IN GRND POOL/VINYL	648	36 x 18	85	38.00	100	20,930	
						58,300	

MUNICIPAL SOFTWARE BY AVITAR

KINGSTON ASSESSING OFFICE

PARCEL TOTAL TAXABLE VALUE

Year	Building	Features	Land
2014	$ 324,000	$ 58,300	$ 85,700
		Parcel Total:	$ 468,000
2015	$ 324,000	$ 58,300	$ 85,700
		Parcel Total:	$ 468,000
2016	**$ 324,000**	**$ 58,300**	**$ 85,700**
		Parcel Total:	**$ 468,000**

LAND VALUATION

Zone: SFRAG SFR AGR **Minimum Acreage:** 1.84 **Minimum Frontage:** 200 **Site:** **Driveway:** **Road:**

Land Type	Units	Base Rate	NC	Adj	Site	Road	DWay	Topography	Cond	Ad Valorem	SPI	R	Tax Value	Notes
1F RES	1.840 ac	80,000	E	100	100	100	100		100	80,000	0	N	80,000	
1F RES	2.860 ac	x 2,000	X	100					100	5,700	0	N	5,700	
	4.700 ac									85,700			**85,700**	

Map: 000R37 **Lot: 00006E** **Sub: 000000** **Card: 1 of 1** **8 SOUTH RD** **KINGSTON** **Printed: 03/02/2016**

PICTURE

OWNER

CYNEWSKI, PATRICIA A., TR
PATRICIA A. CYNEWSKI REV TR
8 SOUTH RD

EXETER, NH 03833-3152

TAXABLE DISTRICTS

District	Percentage

PERMITS

Date	Permit ID	Permit Type	Notes
10/04/04	R37-6E	GARAGE	3 CAR GARAGE

BUILDING DETAILS

Model: **1.75 STORY FRAME CAPE**
Roof: **GABLE HIP/ASPHALT**
Ext: **AVERAGE/VINYL SIDING**
Int: **DRYWALL**
Floor: **HARDWOOD/CARPET**
Heat: **OIL/HOT WATER**
Bedrooms: **4** Baths: **2.5** Fixtures:
Extra Kitchens: Fireplaces:
A/C: **Yes 100.00 %** Generators:
Quality: **A1 AVG+10**
Com. Wall:
Size Adj: **0.8473** Base Rate: **RSA 80.00**
Bldg. Rate: **0.9504**
Sq. Foot Cost: **$ 76.03**

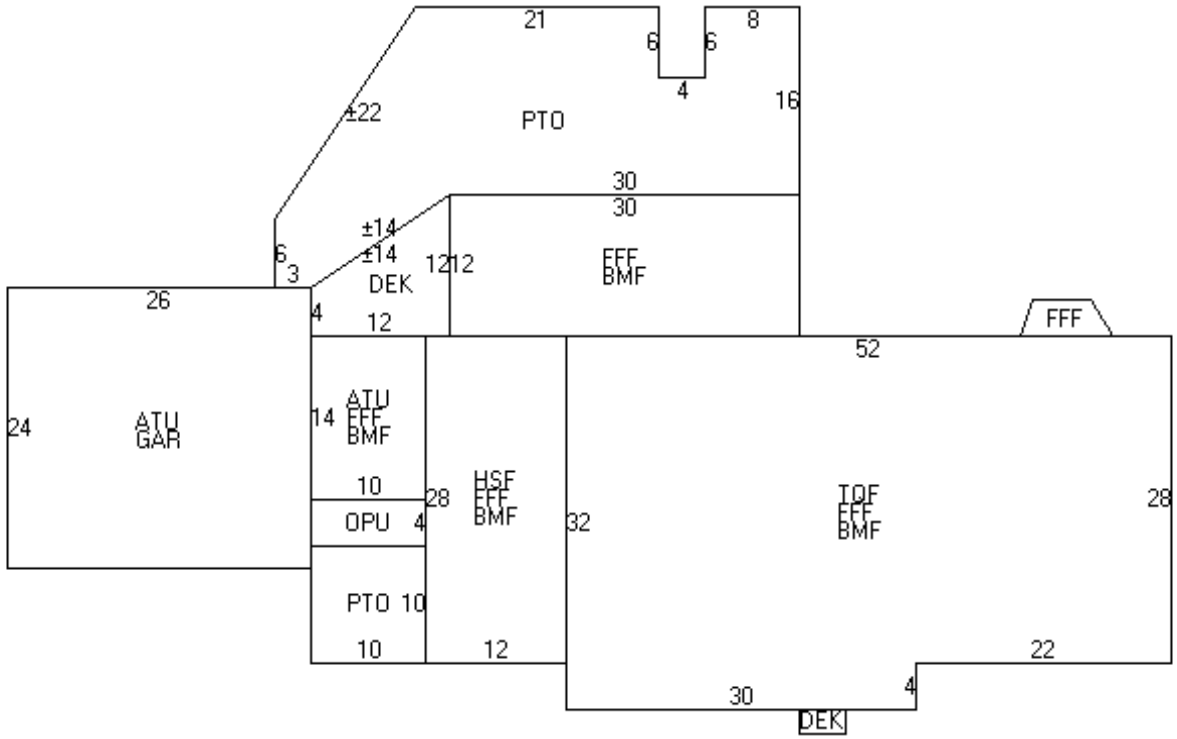

(ATU,GAR=U24R26)L3(PTO=U6[U18R12]R21D6R4U6R8D16L30[L12D8]L3)R3(DEK=[U8R12]D12L12U4)D4(ATU,FFF,BMF=D14R10)(OPU=D4L10)U18R12(FFF,BMF=U12R30)D12L30L2(HSF,FFF,BMF=D28R12)D4(TQF,FFF,BMF=U32R52D28L22D4L30)R20(DEK=D2R4)U2R6U4R22U28L5(FFF=[U3L2]L5[L1D3]R8)D18L59(PTO=D10L10)

BUILDING SUB AREA DETAILS

ID	Description	Area	Adj.	Effect.
ATU	ATTIC	764	0.10	76
PTO	PATIO	760	0.10	76
FFF	FST FLR FIN	2432	1.00	2432
OPU	OPEN PORCH	40	0.15	6
TQF	3/4 STRY FIN	1576	0.75	1182
GAR	GARAGE	624	0.45	281
DEK	DECK/ENTRANCE	104	0.10	10
BMF	BSMNT FINISHED	2412	0.30	724
HSF	1/2 STRY FIN	336	0.50	168
GLA:	**3,782**	**9,048**		**4,955**

2013 BASE YEAR BUILDING VALUATION

Market Cost New:		**$ 376,729**
Year Built:		**1980**
Condition For Age:	AVERAGE	**14 %**
Physical:		
Functional:		
Economic:		
Temporary:		
Total Depreciation:		**14 %**
Building Value:		**$ 324,000**

OWNER INFORMATION

BURTT, ELIZABETH ALLENE

167 OLD NOTTINGHAM ROAD

EPPING, NH 03042-2705

SALES HISTORY

Date	Book	Page	Type	Price	Grantor

PICTURE

LISTING HISTORY

06/01/12 KCV
05/12/03 BW

NOTES

VACANT

EXTRA FEATURES VALUATION

Feature Type	Units	Lngth x Width	Size Adj	Rate	Cond	Market Value	Notes

MUNICIPAL SOFTWARE BY AVITAR

KINGSTON ASSESSING OFFICE

PARCEL TOTAL TAXABLE VALUE

Year	Building	Features	Land
2014	$ 0	$ 0	$ 304
		Parcel Total:	$ 304
2015	$ 0	$ 0	$ 279
		Parcel Total:	$ 279
2016	**$ 0**	**$ 0**	**$ 279**
		Parcel Total:	**$ 279**

LAND VALUATION

Zone: SFRAG SFR AGR **Minimum Acreage:** 1.84 **Minimum Frontage:** 200 **Site:** **Driveway:** **Road:**

Land Type	Units	Base Rate	NC	Adj	Site	Road	DWay	Topography	Cond	Ad Valorem	SPI	R	Tax Value	Notes
FARM LAND	0.700 ac	x 2,000	X	100	100	100	100		100	1,400	100	N	279	
	0.700 ac									1,400			**279**	

PICTURE

OWNER

BURTT, ELIZABETH ALLENE

167 OLD NOTTINGHAM ROAD

EPPING, NH 03042-2705

TAXABLE DISTRICTS

District	Percentage

PERMITS

Date	Permit ID	Permit Type	Notes

BUILDING DETAILS

Model:
Roof:
Ext:
Int:
Floor:
Heat:
Bedrooms: Baths: Fixtures:
Extra Kitchens: Fireplaces:
A/C: Generators:
Quality:
Com. Wall:
Stories:
Base Type:

BUILDING SUB AREA DETAILS

2013 BASE YEAR BUILDING VALUATION

Year Built:
Condition For Age: %
Physical:
Functional:
Economic:
Temporary:
%

OWNER INFORMATION

LOWELL, JAMES R. III
LOWELL, RACHEL GREENE
21 B SOUTH RD

BRENTWOOD, NH 03833-6312

SALES HISTORY

Date	Book	Page	Type	Price	Grantor

PICTURE

LISTING HISTORY

06/01/12 KCV
05/12/03 BW

NOTES

EXTRA FEATURES VALUATION

Feature Type	Units	Lngth x Width	Size Adj	Rate	Cond	Market Value	Notes

MUNICIPAL SOFTWARE BY AVITAR

KINGSTON ASSESSING OFFICE

PARCEL TOTAL TAXABLE VALUE

Year	Building	Features	Land
2014	$ 0	$ 0	$ 800
		Parcel Total:	$ 800
2015	$ 0	$ 0	$ 800
		Parcel Total:	$ 800
2016	**$ 0**	**$ 0**	**$ 800**
		Parcel Total:	**$ 800**

LAND VALUATION

Zone: SFRAG SFR AGR **Minimum Acreage:** 1.84 **Minimum Frontage:** 200 **Site:** **Driveway:** **Road:**

Land Type	Units	Base Rate	NC	Adj	Site	Road	DWay	Topography	Cond	Ad Valorem	SPI	R	Tax Value	Notes
1F RES	0.400 ac	x 2,000	X	100	100	100	100		100	800	0	N	800	
	0.400 ac									800			**800**	

PICTURE

OWNER

LOWELL, JAMES R. III
LOWELL, RACHEL GREENE
21 B SOUTH RD

BRENTWOOD, NH 03833-6312

TAXABLE DISTRICTS

District	Percentage

PERMITS

Date	Permit ID	Permit Type	Notes

BUILDING DETAILS

Model:
Roof:
Ext:
Int:
Floor:
Heat:
Bedrooms: Baths: Fixtures:
Extra Kitchens: Fireplaces:
A/C: Generators:
Quality:
Com. Wall:
Stories:
Base Type:

BUILDING SUB AREA DETAILS

2013 BASE YEAR BUILDING VALUATION

Year Built:
Condition For Age: %
Physical:
Functional:
Economic:
Temporary:
%

OWNER INFORMATION

FRANKLIN, ALVIN - TRST.
ALVIN FRANLIN REV. TRUST
52 SOUTH RD

BRENTWOOD, NH 03833

SALES HISTORY

Date	Book	Page	Type	Price	Grantor
07/19/2012	5336	2952	U I 38		FRANKLIN, ALVIN
06/19/1995	3106	0741	U I 38		STEMPEL, SHARON L

PICTURE

LISTING HISTORY

07/06/12 KCML
05/16/03 BW O

NOTES

RED, REMOVE SV SHED 7/12KC

EXTRA FEATURES VALUATION

Feature Type	Units	Lngth x Width	Size Adj	Rate	Cond	Market Value	Notes
FIREPLACE 1-1	1		100	3,000.00	100	3,000	
						3,000	

MUNICIPAL SOFTWARE BY AVITAR.

KINGSTON ASSESSING OFFICE

PARCEL TOTAL TAXABLE VALUE

Year	Building	Features	Land
2014	$ 119,600	$ 3,000	$ 76,400
		Parcel Total:	$ 199,000
2015	$ 119,600	$ 3,000	$ 76,400
		Parcel Total:	$ 199,000
2016	**$ 119,600**	**$ 3,000**	**$ 76,400**
		Parcel Total:	**$ 199,000**

LAND VALUATION

Zone: SFRAG SFR AGR **Minimum Acreage:** 1.84 **Minimum Frontage:** 200 **Site:** **Driveway:** **Road:**

Land Type	Units	Base Rate	NC	Adj	Site	Road	DWay	Topography	Cond	Ad Valorem	SPI	R	Tax Value	Notes
1F RES	0.900 ac	76,400	E	100	100	100	100		100	76,400	0	N	76,400	
	0.900 ac									76,400			**76,400**	

PICTURE

OWNER

FRANKLIN, ALVIN - TRST.
ALVIN FRANLIN REV. TRUST
52 SOUTH RD

BRENTWOOD, NH 03833

TAXABLE DISTRICTS

District	Percentage

PERMITS

Date	Permit ID	Permit Type	Notes

BUILDING DETAILS

Model: **1.75 STORY FRAME CAPE**
Roof: **GABLE HIP/ASPHALT**
Ext: **CLAP BOARD**
Int: **DRYWALL**
Floor: **CARPET/HARDWOOD**
Heat: **OIL/HOT WATER**
Bedrooms: **2** Baths: **1.5** Fixtures:
Extra Kitchens: Fireplaces:
A/C: **No** Generators:
Quality: **A0 AVG**
Com. Wall:
Size Adj: **1.0104** Base Rate: **RSA 80.00**
Bldg. Rate: **0.9503**
Sq. Foot Cost: **$ 76.02**

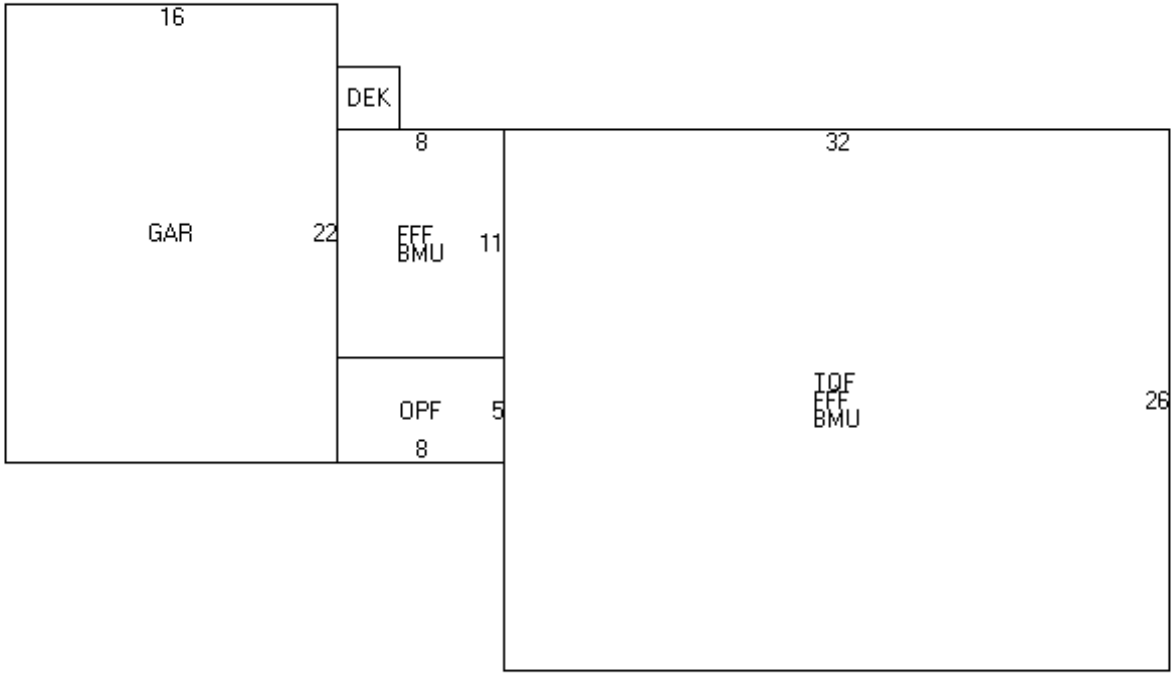

(GAR=R16D22)(OPF=R8U5)(FFF,BMU=U11L8)(DEK=U3R3)R5D3(TQF,FFF,BMU=R32D26)

BUILDING SUB AREA DETAILS

ID	Description	Area	Adj.	Effect.
GAR	GARAGE	352	0.45	158
OPF	OPEN PORCH FIN	40	0.25	10
FFF	FST FLR FIN	920	1.00	920
BMU	BSMNT	920	0.15	138
DEK	DECK/ENTRANCE	9	0.10	1
TQF	3/4 STRY FIN	832	0.75	624
GLA:	**1,544**	**3,073**		**1,851**

2013 BASE YEAR BUILDING VALUATION

Market Cost New:		**$ 140,713**
Year Built:		**1960**
Condition For Age:	GOOD	**15 %**
Physical:		
Functional:		
Economic:		
Temporary:		
Total Depreciation:		**15 %**
Building Value:		**$ 119,600**

OWNER INFORMATION

KOKE, SONYA T. - TRUSTEE
SONYA T. KOKE REVOCABLE TRST
54 SOUTH RD

BRENTWOOD, NH 03833-6305

SALES HISTORY

Date	Book	Page	Type	Price	Grantor
03/09/2009	4987	2499	U I 38		KOKE, SONYA T.
05/07/2003	4024	392	Q I	107,000	LINCOLN, ROBERT G. SR

PICTURE

LISTING HISTORY

07/06/12 KCM
03/05/09 FRR
05/16/03 BW X

NOTES

CHK 04 FOR EXEMPTION STATUS LARGE WET AREA ON LAND LIMITS USE. D-16636.. N/C FRR 3/09, CHNG SIDING & HEATING FUEL 7/12KC

EXTRA FEATURES VALUATION

Feature Type	Units	Lngth x Width	Size Adj	Rate	Cond	Market Value	Notes

MUNICIPAL SOFTWARE BY AVITAR

KINGSTON ASSESSING OFFICE

PARCEL TOTAL TAXABLE VALUE

Year	Building	Features	Land
2014	$ 27,700	$ 0	$ 59,300
		Parcel Total:	$ 87,000
2015	$ 27,700	$ 0	$ 59,300
		Parcel Total:	$ 87,000
2016	**$ 27,700**	**$ 0**	**$ 59,300**
		Parcel Total:	**$ 87,000**

LAND VALUATION

Zone: SFRAG SFR AGR **Minimum Acreage:** 1.84 **Minimum Frontage:** 200 **Site:** **Driveway:** **Road:**

Land Type	Units	Base Rate	NC	Adj	Site	Road	DWay	Topography	Cond	Ad Valorem	SPI	R	Tax Value	Notes
1F RES	1.550 ac	79,019	E	100	100	100	100		75	59,300	0	N	59,300	TOPO
	1.550 ac									59,300			**59,300**	

Map: 000R38 **Lot: 000010** **Sub: 000000** **Card: 1 of 1** **54 SOUTH RD** **KINGSTON** **Printed: 03/02/2016**

PICTURE

OWNER

KOKE, SONYA T. - TRUSTEE
SONYA T. KOKE REVOCABLE TRST
54 SOUTH RD

BRENTWOOD, NH 03833-6305

TAXABLE DISTRICTS

District	Percentage

PERMITS

Date	Permit ID	Permit Type	Notes

BUILDING DETAILS

Model: **1.00 STORY FRAME MOBILEHOME**
Roof: **GABLE HIP/ASPHALT**
Ext: **VINYL SIDING**
Int: **PLYWOOD PANEL**
Floor: **CARPET**
Heat: **GAS/FA DUCTED**
Bedrooms: **3** Baths: **1.0** Fixtures:
Extra Kitchens: Fireplaces:
A/C: **No** Generators:
Quality: **A0 AVG**
Com. Wall:
Size Adj: **0.9641** Base Rate: **MHS 45.00**
Bldg. Rate: **0.9159**
Sq. Foot Cost: **$ 41.22**

BUILDING SUB AREA DETAILS

ID	Description	Area	Adj.	Effect.
DEK	DECK/ENTRANCE	100	0.10	10
FFF	FST FLR FIN	924	1.00	924
GLA:	**924**	**1,024**		**934**

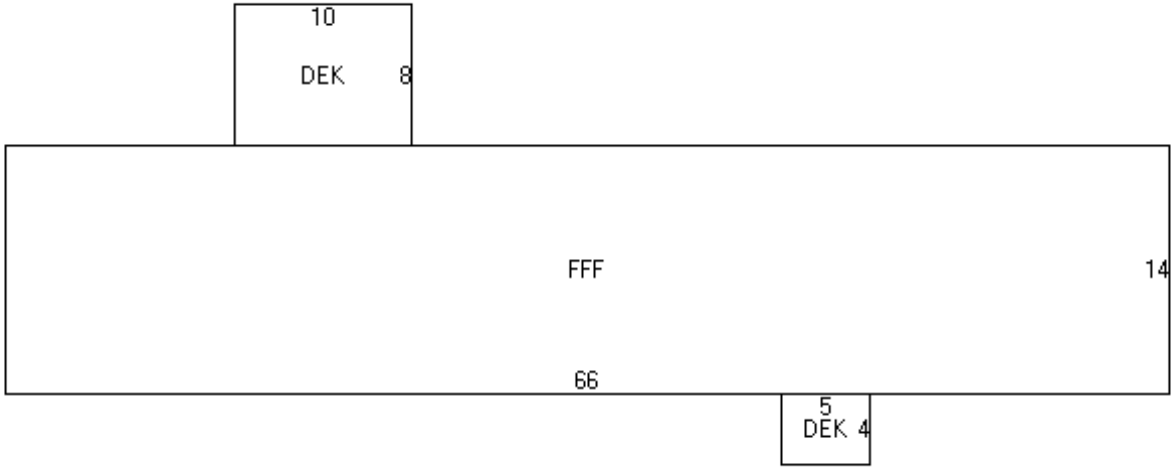

(DEK=R10D8)R43(FFF=D14L66)R44(DEK=R5D4)

2013 BASE YEAR BUILDING VALUATION

Market Cost New:		**$ 38,499**
Year Built:		**1980**
Condition For Age:	AVERAGE	**28 %**
Physical:		
Functional:		
Economic:		
Temporary:		
Total Depreciation:		**28 %**
Building Value:		**$ 27,700**