OWNER INFORMATION

NIRGIANAKIS, KATHY A.
NIRGIANAKIS, GEORGE
44 ALLERTON ST. #2

LYNN, MA 01904

SALES HISTORY

Date	Book	Page	Type	Price	Grantor
03/28/2006	4634	2169	Q I	346,000	SMITH
01/30/2004	4227	2944	Q I	282,500	SANTERRE
08/05/2003	4111	2773	Q I	295,000	CARRIGAN

PICTURE

LISTING HISTORY

12/14/11	KCM
04/25/03	KJ O
04/10/03	BW X

NOTES

WHITE

EXTRA FEATURES VALUATION

Feature Type	Units	Lngth x Width	Size Adj	Rate	Cond	Market Value	Notes
DECK DETACHED	192	12 x 16	143	10.00	90	2,471	
SHED-WOOD	160	10 x 16	160	10.00	90	2,304	
						4,800	

MUNICIPAL SOFTWARE BY AVITAR

KINGSTON ASSESSING OFFICE

PARCEL TOTAL TAXABLE VALUE

Year	Building	Features	Land
2013	$ 172,400	$ 4,800	$ 88,500
		Parcel Total:	$ 265,700
2014	$ 172,400	$ 4,800	$ 88,500
		Parcel Total:	$ 265,700
2015	**$ 172,400**	**$ 4,800**	**$ 88,500**
		Parcel Total:	**$ 265,700**

LAND VALUATION

Zone: SFRAQ SFR W/AQUIFER **Minimum Acreage:** 3.00 **Minimum Frontage:** 200 **Site:** **Driveway:** **Road:**

Land Type	Units	Base Rate	NC	Adj	Site	Road	DWay	Topography	Cond	Ad Valorem	SPI	R	Tax Value	Notes
1F RES	1.840 ac	80,000	F	110	100	100	100		100	88,000	0	N	88,000	
1F RES	0.240 ac	x 2,000	X	100					100	500	0	N	500	
	2.080 ac									88,500			**88,500**	

Map: 000R23 **Lot: 000039** **Sub: 00000A** **Card: 1 of 1** **3 ACORN DR** **KINGSTON** **Printed: 12/17/2015**

PICTURE

OWNER

NIRGIANAKIS, KATHY A.
NIRGIANAKIS, GEORGE
44 ALLERTON ST. #2

LYNN, MA 01904

TAXABLE DISTRICTS

District	Percentage

PERMITS

Date	Permit ID	Permit Type	Notes

BUILDING DETAILS

Model: **2.00 STORY FRAME GAMB/CAPE**
Roof: **GAMBREL/ASPHALT**
Ext: **CLAP BOARD**
Int: **DRYWALL**
Floor: **HARDWOOD/CARPET**
Heat: **OIL/CONVECTION**
Bedrooms: **4** Baths: **2.0** Fixtures:
Extra Kitchens: Fireplaces:
A/C: **No** Generators:
Quality: **A0 AVG**
Com. Wall:
Size Adj: **0.9041** Base Rate: **RSA 80.00**
Bldg. Rate: **0.8506**
Sq. Foot Cost: **$ 68.05**

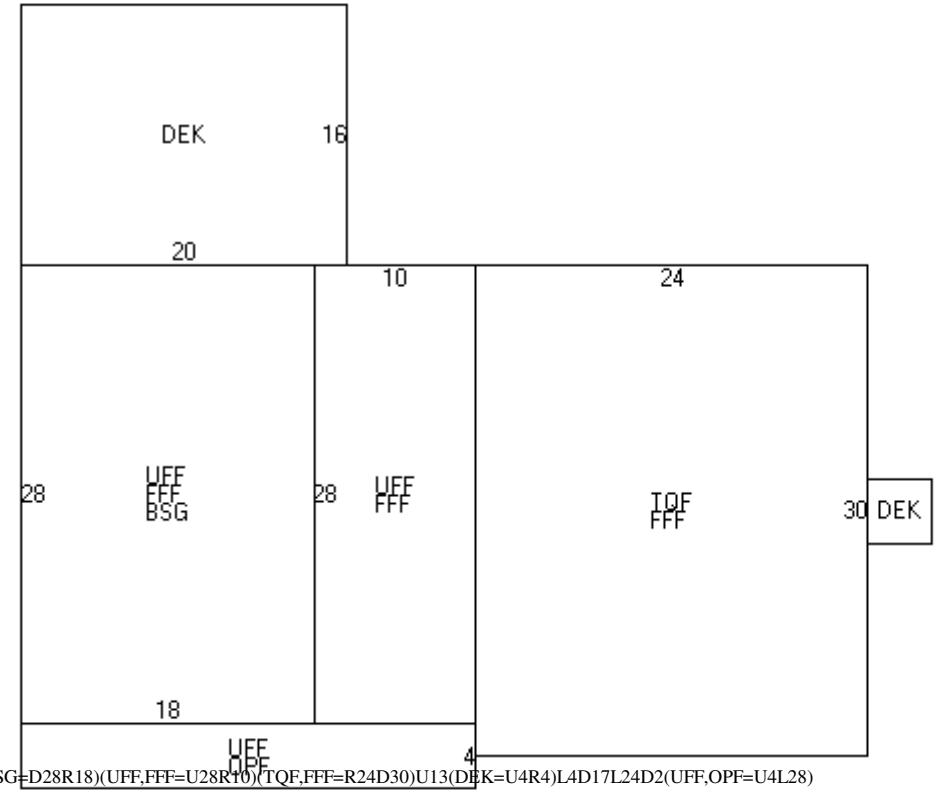

(DEK=D16L20)(UFF,FFF,BSG=D28R18)(UFF,FFF=U28R10)(TQF,FFF=R24D30)U13(DEK=U4R4)L4D17L24D2(UFF,OPF=U4L28)

BUILDING SUB AREA DETAILS

ID	Description	Area	Adj.	Effect.
DEK	DECK/ENTRANCE	336	0.10	34
UFF	UPPER FLR FIN	896	1.00	896
FFF	FST FLR FIN	1504	1.00	1504
BSG	BSMT GAR	504	0.25	126
TQF	3/4 STRY FIN	720	0.75	540
OPF	OPEN PORCH FIN	112	0.25	28
GLA:	**2,940**	**4,072**		**3,128**

2013 BASE YEAR BUILDING VALUATION

Market Cost New:		**$ 212,860**
Year Built:		**1982**
Condition For Age:	AVERAGE	**14 %**
Physical:		
Functional:	GAMBREL	**5 %**
Economic:		
Temporary:		
Total Depreciation:		**19 %**
Building Value:		**$ 172,400**

OWNER INFORMATION

PARLATORE, KATHERINE, TR

KATHERINE E. PARLATORE REV TR

5 ACORN DR

KINGSTON, NH 03848-3602

SALES HISTORY

Date	Book	Page	Type	Price	Grantor
01/29/2013	5403	2660	U I 38		PARLATORE, KATHERINE,
12/14/2007	4870	0195	U I 38		PARLATORE
03/23/2007	4779	644	U I 38		PARLATORE TRUST
07/07/2006	4678	2229	U I 38		PARLATORE
09/01/2005	4541	2874	U I 38		PARLATORE

PICTURE

LISTING HISTORY

03/14/13	KCPU	
12/14/11	KCM	
03/16/11	KCPU	
04/12/10	KCO	DROP P/U; N/C; ADJ. SKTCH.
03/04/09	FRR	N/C. CK '10.
04/15/08	KCO	OWNER REF. MEAS.; EST. CI
04/18/07	JARX	P/U - ADD 15%; CK '08
04/16/04	SH X	

NOTES

D-8497. GREY. DROP PU 3/11KC, NOH EST GAR ADDITION COMP 3/13KC

EXTRA FEATURES VALUATION

Feature Type	Units	Lngth x Width	Size Adj	Rate	Cond	Market Value	Notes
FIREPLACE 1-1	1		100	3,000.00	100	3,000	
SHED-WOOD	220	20 x 11	133	10.00	100	2,926	
IN GRND POOL/VINYL	288	12 x 24	116	38.00	100	12,695	
						18,600	

MUNICIPAL SOFTWARE BY AVITAR.

KINGSTON ASSESSING OFFICE

PARCEL TOTAL TAXABLE VALUE

Year	Building	Features	Land
2013	$ 267,400	$ 18,600	$ 89,200
		Parcel Total:	$ 375,200
2014	$ 267,400	$ 18,600	$ 89,200
		Parcel Total:	$ 375,200
2015	**$ 267,400**	**$ 18,600**	**$ 89,200**
		Parcel Total:	**$ 375,200**

LAND VALUATION

Zone: SFR SINGLE FAM RES **Minimum Acreage:** 1.84 **Minimum Frontage:** 200 **Site:** **Driveway:** **Road:**

Land Type	Units	Base Rate	NC	Adj	Site	Road	DWay	Topography	Cond	Ad Valorem	SPI	R	Tax Value	Notes
1F RES	1.840 ac	80,000	F	110	100	100	100		100	88,000	0	N	88,000	
1F RES	1.180 ac	x 2,000	X	100					50	1,200	0	N	1,200	TOPO
	3.020 ac									89,200			**89,200**	

Map: 000R23 **Lot: 000039** **Sub: 00000B** **Card: 1 of 1** **5 ACORN DR** **KINGSTON** **Printed: 12/17/2015**

PICTURE

OWNER

PARLATORE, KATHERINE, TR
KATHERINE E. PARLATORE REV TR
5 ACORN DR

KINGSTON, NH 03848-3602

TAXABLE DISTRICTS

District	Percentage

PERMITS

Date	Permit ID	Permit Type	Notes
11/29/05	R23-39B	GARAGE	GARAGE, GREAT ROOM, BI
08/01/03	R23-39B	BUILDING	INGROUND SWIMMING PO
08/02/02	R23-39B	SEPTIC	REPAIR / REPLACE
01/06/86	129499	SEPTIC	APPROVAL FOR CONSTRU

BUILDING DETAILS

Model: **1.75 STORY FRAME R. CAPE**
Roof: **GABLE HIP/ASPHALT**
Ext: **VINYL SIDING**
Int: **DRYWALL**
Floor: **HARDWOOD/CARPET**
Heat: **OIL/HOT WATER**
Bedrooms: **4** Baths: **2.5** Fixtures:
Extra Kitchens: Fireplaces:
A/C: **No** Generators:
Quality: **A1 AVG+10**
Com. Wall:
Size Adj: **0.8658** Base Rate: **RSA 80.00**
Bldg. Rate: **0.9334**
Sq. Foot Cost: **$ 74.67**

BUILDING SUB AREA DETAILS

ID	Description	Area	Adj.	Effect.
GAR	GARAGE	672	0.45	302
OPF	OPEN PORCH FIN	160	0.25	40
TQF	3/4 STRY FIN	1400	0.75	1050
FFF	FST FLR FIN	1484	1.00	1484
BMF	BSMNT FINISHED	1400	0.30	420
DEK	DECK/ENTRANCE	18	0.10	2
UFF	UPPER FLR FIN	832	1.00	832
EPU	ENCL PORCH	96	0.35	34
GLA:	**3,366**	**6,062**		**4,164**

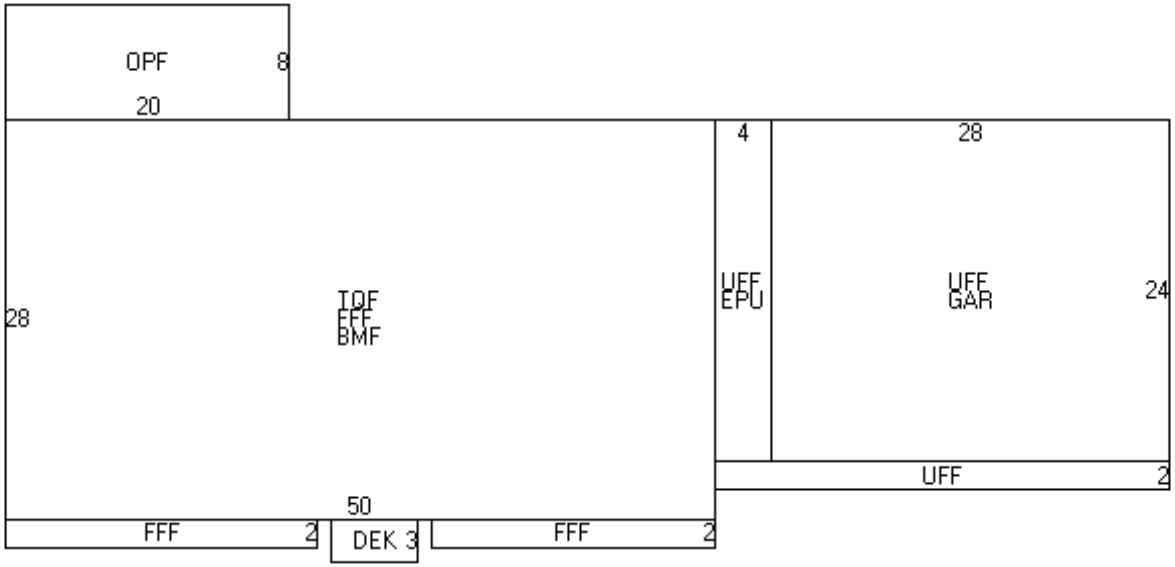

(OPF=D8L20)(TQF,FFF,BMF=D28R50)(FFF=D2L20)U2L1(DEK=D3L6)U3L1(FFF=D2L22)U6R50(UFF,EPU=U24R4)(UFF,GAR=R28D24)(UFF=D2L32)

2013 BASE YEAR BUILDING VALUATION

Market Cost New: **$ 310,926**
Year Built: **1980**
Condition For Age: AVERAGE **14 %**
Physical:
Functional:
Economic:
Temporary:
Total Depreciation: **14 %**

Building Value: **$ 267,400**

OWNER INFORMATION

RICCI, DAVID L.
RICCI, CAROL S.
7 ACORN DRIVE

KINGSTON, NH 03848

SALES HISTORY

Date	Book	Page	Type	Price	Grantor
07/29/2008	4938	2409	U I 46	277,500	DEMBKOSKI, JULIE
04/06/2006	4639	158	U I 39		DEMBROSKI

PICTURE

LISTING HISTORY

12/14/11 KCM
04/10/03 BW X

NOTES

D-8497 -- GREY, REMOVE DET DECKS, CORRECT SKETCH LABELING
12/11KC

EXTRA FEATURES VALUATION

Feature Type	Units	Lngth x Width	Size Adj	Rate	Cond	Market Value	Notes
FIREPLACE 1-1	1		100	3,000.00	100	3,000	
SHED-WOOD	144	12 x 12	171	10.00	90	2,216	
SHED-WOOD	36	6 x 6	400	10.00	80	1,152	
POOL ABOVE GROUND	360		104	13.00	60	2,920	
						9,300	

MUNICIPAL SOFTWARE BY AVITAR

KINGSTON ASSESSING OFFICE

PARCEL TOTAL TAXABLE VALUE

Year	Building	Features	Land
2013	$ 221,800	$ 9,300	$ 88,200
		Parcel Total:	$ 319,300
2014	$ 221,800	$ 9,300	$ 88,200
		Parcel Total:	$ 319,300
2015	**$ 221,800**	**$ 9,300**	**$ 88,200**
		Parcel Total:	**$ 319,300**

LAND VALUATION

Zone: SFR SINGLE FAM RES **Minimum Acreage:** 1.84 **Minimum Frontage:** 200 **Site:** **Driveway:** **Road:**

Land Type	Units	Base Rate	NC	Adj	Site	Road	DWay	Topography	Cond	Ad Valorem	SPI	R	Tax Value	Notes
1F RES	1.840 ac	80,000	F	110	100	100	100		100	88,000	0	N	88,000	
1F RES	0.210 ac	x 2,000	X	100					50	200	0	N	200	TOPO
	2.050 ac									88,200			**88,200**	

Map: 000R23 **Lot: 000039** **Sub: 00000C** **Card: 1 of 1** **7 ACORN DR** **KINGSTON** **Printed: 12/17/2015**

PICTURE

OWNER

RICCI, DAVID L.
RICCI, CAROL S.
7 ACORN DRIVE

KINGSTON, NH 03848

TAXABLE DISTRICTS

District	Percentage

PERMITS

Date	Permit ID	Permit Type	Notes

BUILDING DETAILS

Model: **1.75 STORY FRAME CAPE**
Roof: **GABLE HIP/ASPHALT**
Ext: **CLAP BOARD**
Int: **DRYWALL**
Floor: **HARD TILE/CARPET**
Heat: **OIL/HOT WATER**
Bedrooms: **3** Baths: **2.0** Fixtures:
Extra Kitchens: Fireplaces:
A/C: **No** Generators:
Quality: **A2 AVG+20**
Com. Wall:
Size Adj: **0.9170** Base Rate: **RSA 80.00**
Bldg. Rate: **1.0676**
Sq. Foot Cost: **$ 85.41**

BUILDING SUB AREA DETAILS

ID	Description	Area	Adj.	Effect.
TQU	3/4 STRY UNFIN	576	0.35	202
GAR	GARAGE	576	0.45	259
FFF	FST FLR FIN	1330	1.00	1330
OPF	OPEN PORCH FIN	100	0.25	25
CTH	CATHEDRAL	360	0.10	36
SLB	SLAB	360	0.00	0
DEK	DECK/ENTRANCE	422	0.10	42
TQF	3/4 STRY FIN	936	0.75	702
BMF	BSMNT FINISHED	209	0.30	63
BMU	BSMNT	727	0.15	109
EPF	ENCLSD PORCH	168	0.70	118
GLA:	**2,150**	**5,764**		**2,886**

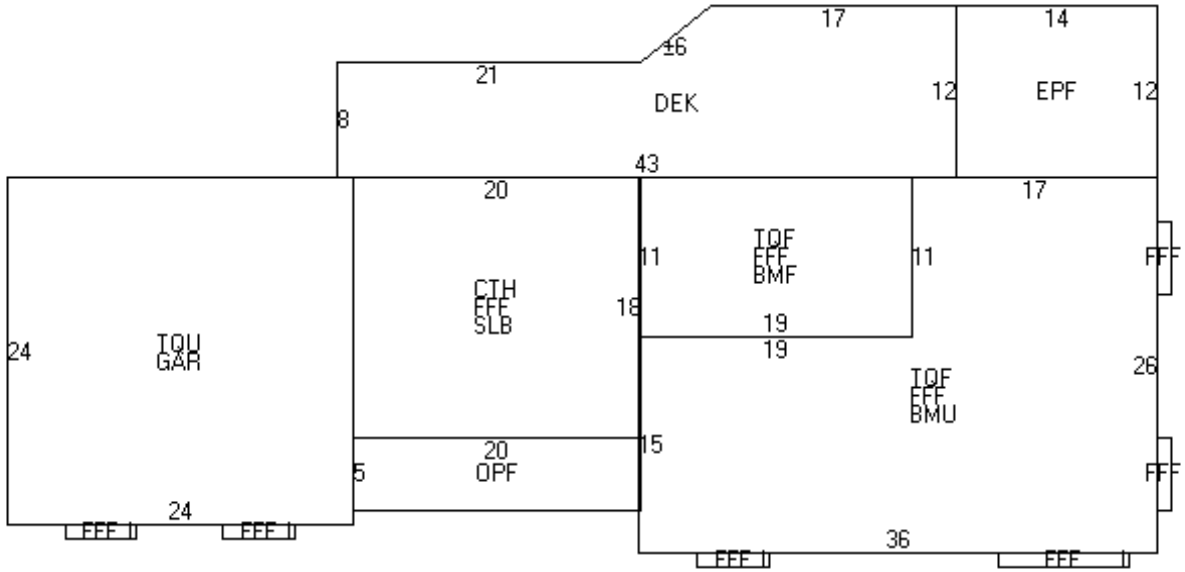

(TQU,GAR=D24R24)L4(FFF=D1L5)U1L6(FFF=D1L5)U1R20U1(OPF=U5R20)(CTH,FFF,SLB=U18L20)L1(DEK=U8R21[U4R5]R17D12L43)R21(TQF,FFF,BMF=D11R19)L19(TQF,FFF,BMU=D15R36U26L17D11L19)D15R36L2(FFF=D1L9)U1L16(FFF=D1L5)U1R32U3(FFF=R1U5)L1U10(FFF=R1U5)L1U3(EPF=U12L14)

2013 BASE YEAR BUILDING VALUATION

Market Cost New:		**$ 246,493**
Year Built:		**1990**
Condition For Age:	GOOD	**10 %**
Physical:		
Functional:		
Economic:		
Temporary:		
Total Depreciation:		**10 %**
Building Value:		**$ 221,800**

OWNER INFORMATION

DIPIETRO, MICHAEL
DIPIETRO, KATHY
430 HILLDALE AVENUE

HAVERHILL, MA 01832

SALES HISTORY

Date	Book	Page	Type	Price	Grantor
12/16/2015	5678	0962	Q I	303,000	PELLETIER, BILL D.
08/10/2009	5041	1524	Q I	270,000	NICHOLS, PAUL F

PICTURE

LISTING HISTORY

03/14/13	KCPU	CORRECT SIDING, ADD DET
12/14/11	KCM	CORRECT SKETCH MEAS &
04/10/03	BW X	

NOTES

NATURAL. D-8497.

EXTRA FEATURES VALUATION

Feature Type	Units	Lngth x Width	Size Adj	Rate	Cond	Market Value	Notes
FIREPLACE 1-1	1		100	3,000.00	100	3,000	
SHED-WOOD	128	8 x 16	185	10.00	100	2,368	
SCREENHOUSE	312	24 x 13	111	13.50	80	3,740	
PATIO AREA	624	26 x 24	86	4.00	80	1,717	
SHED-WOOD	96	12 x 8	227	10.00	40	872	
DECK DETACHED	144	12 x 12	171	10.00	80	1,970	
POOL ABOVE GROUND	160		160	13.00	100	3,328	
						17,000	

MUNICIPAL SOFTWARE BY AVITAR

KINGSTON ASSESSING OFFICE

PARCEL TOTAL TAXABLE VALUE

Year	Building	Features	Land
2013	$ 181,900	$ 17,000	$ 88,100
		Parcel Total:	$ 287,000
2014	$ 181,900	$ 17,000	$ 88,100
		Parcel Total:	$ 287,000
2015	**$ 181,900**	**$ 17,000**	**$ 88,100**
		Parcel Total:	**$ 287,000**

LAND VALUATION

Zone: SFR SINGLE FAM RES **Minimum Acreage:** 1.84 **Minimum Frontage:** 200 **Site:** **Driveway:** **Road:**

Land Type	Units	Base Rate	NC	Adj	Site	Road	DWay	Topography	Cond	Ad Valorem	SPI	R	Tax Value	Notes
1F RES	1.840 ac	80,000	F	110	100	100	100		100	88,000	0	N	88,000	
1F RES	0.060 ac	x 2,000	X	100					100	100	0	N	100	
	1.900 ac									88,100			**88,100**	

Map: 000R23 **Lot: 000039** **Sub: 00000D** **Card: 1 of 1** **9 ACORN DR** **KINGSTON** **Printed: 12/17/2015**

PICTURE

OWNER

DIPIETRO, MICHAEL
DIPIETRO, KATHY
430 HILLDALE AVENUE

HAVERHILL, MA 01832

TAXABLE DISTRICTS

District	Percentage

PERMITS

Date	Permit ID	Permit Type	Notes
03/23/12	R23-39D	EXTERIOR ONLY	ABOVE GROUND POOL 12
10/26/87	R23-39D	ADDITION	26' X 26' GARAGE ADDITIO
11/14/80	90788	SEPTIC	APPROVAL FOR CONSTRU
11/14/80	R23-39D	NEW BUILDING	SF 3BR HS

BUILDING DETAILS

Model: **1.00 STORY FRAME R. RANCH**
Roof: **GABLE HIP/ASPHALT**
Ext: **CEDAR/REDWD**
Int: **DRYWALL**
Floor: **HARDWOOD/CARPET**
Heat: **OIL/FA DUCTED**
Bedrooms: **3** Baths: **2.0** Fixtures:
Extra Kitchens: Fireplaces:
A/C: **No** Generators:
Quality: **A1 AVG+10**
Com. Wall:
Size Adj: **0.9437** Base Rate: **RSA 80.00**
Bldg. Rate: **1.0381**
Sq. Foot Cost: **$ 83.05**

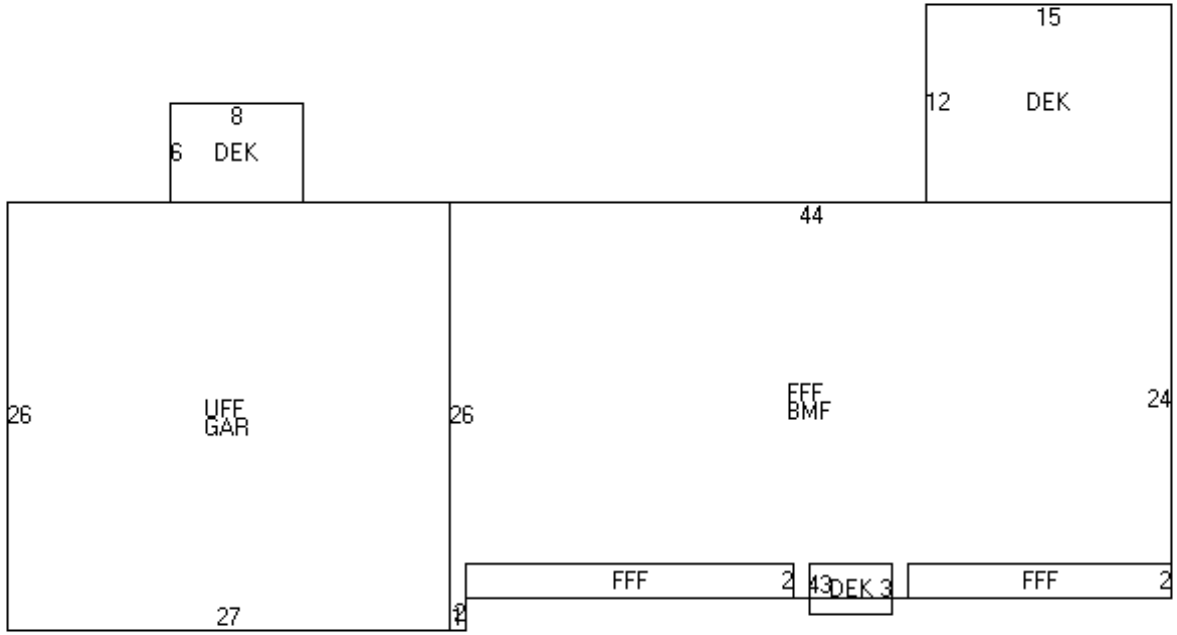

(UFF,GAR=L27U26)R10(DEK=U6R8)D6R9(FFF,BMF=D26R1U2R43U24L44)R29(DEK=U12R15)D34(FFF=D2L16)U2L1(DEK=D3L5)U3L1(FFF=D2L20)

BUILDING SUB AREA DETAILS

ID	Description	Area	Adj.	Effect.
UFF	UPPER FLR FIN	702	1.00	702
GAR	GARAGE	702	0.45	316
DEK	DECK/ENTRANCE	243	0.10	24
FFF	FST FLR FIN	1130	1.00	1130
BMF	BSMNT FINISHED	1058	0.30	317
GLA:	**1,832**	**3,835**		**2,489**

2013 BASE YEAR BUILDING VALUATION

Market Cost New:		**$ 206,711**
Year Built:		**1990**
Condition For Age:	AVERAGE	**12 %**
Physical:		
Functional:		
Economic:		
Temporary:		
Total Depreciation:		**12 %**
Building Value:		**$ 181,900**

OWNER INFORMATION

PITTS, LINWOOD A. JR
PITTS, CLAIRE A
10 ACORN DR

KINGSTON, NH 03848

SALES HISTORY

Date	Book	Page	Type	Price	Grantor
01/24/1997	3196	1619	U I 82		ABBOTT, RAY F.

PICTURE

LISTING HISTORY

12/14/11	KCM
04/16/04	SH O
04/29/03	RW O
04/10/03	BW O

NOTES

D-8497. GREY. ROOF OVER GARDEN-N/V. CORRECT SKETCH 12/11KC

EXTRA FEATURES VALUATION

Feature Type	Units	Lngth x Width	Size Adj	Rate	Cond	Market Value	Notes
FIREPLACE 1-1	1		100	3,000.00	100	3,000	
SHED-WOOD	84	14 x 6	250	10.00	90	1,890	
SHED-WOOD	70	7 x 10	289	10.00	90	1,821	
SHED-WOOD	192	12 x 16	143	10.00	90	2,471	
GARAGE	576	24 x 24	88	30.00	100	15,206	
POOL ABOVE GROUND	200		140	13.00	70	2,548	
						26,900	

MUNICIPAL SOFTWARE BY AVITAR

KINGSTON ASSESSING OFFICE

PARCEL TOTAL TAXABLE VALUE

Year	Building	Features	Land
2013	$ 147,200	$ 26,900	$ 88,200
		Parcel Total:	$ 262,300
2014	$ 147,200	$ 26,900	$ 88,200
		Parcel Total:	$ 262,300
2015	**$ 147,200**	**$ 26,900**	**$ 88,200**
		Parcel Total:	**$ 262,300**

LAND VALUATION

Zone: SFR SINGLE FAM RES **Minimum Acreage:** 1.84 **Minimum Frontage:** 200 **Site:** **Driveway:** **Road:**

Land Type	Units	Base Rate	NC	Adj	Site	Road	DWay	Topography	Cond	Ad Valorem	SPI	R	Tax Value	Notes
1F RES	1.840 ac	80,000	F	110	100	100	100		100	88,000	0	N	88,000	
1F RES	0.080 ac	x 2,000	X	100					100	200	0	N	200	
	1.920 ac									88,200			**88,200**	

Map: 000R23 **Lot: 000039** **Sub: 00000E** **Card: 1 of 1** **10 ACORN DR** **KINGSTON** **Printed: 12/17/2015**

PICTURE

OWNER

PITTS, LINWOOD A. JR
PITTS, CLAIRE A
10 ACORN DR

KINGSTON, NH 03848

TAXABLE DISTRICTS

District	Percentage

PERMITS

Date	Permit ID	Permit Type	Notes
02/14/11	R23-39E	ELECTRIC PERMIT	GENERATOR
06/17/03	R23-39E	BUILDING	16 X 18 MASTER BEDROOM

BUILDING DETAILS

Model: **1.00 STORY FRAME RANCH**
Roof: **GABLE HIP/ASPHALT**
Ext: **PREFAB WD PNL**
Int: **DRYWALL**
Floor: **LINOLEUM OR SIM/CARPET**
Heat: **OIL/HOT WATER**
Bedrooms: **3** Baths: **2.0** Fixtures:
Extra Kitchens: Fireplaces:
A/C: **No** Generators:
Quality: **A0 AVG**
Com. Wall:
Size Adj: **0.9545** Base Rate: **RSA 80.00**
Bldg. Rate: **0.8972**
Sq. Foot Cost: **$ 71.78**

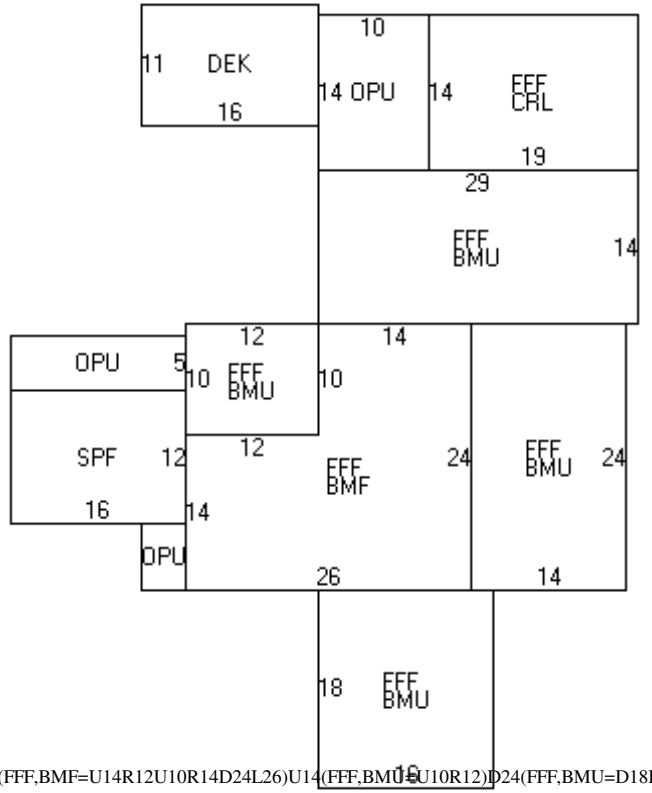

(OPU=R16D5)(SPF=D12L16)R12(OPU=D6R4)(FFF,BMF=U14R12U10R14D24L26)U14(FFF,BMU=U10R12)D24(FFF,BMU=D18R16)U18L2(FFF,BMU=R14U24)R1(FFF,BMU=U14L29)(OPU=U14R10)(FFF,CRL=D14R19)L29U4(DEK=L16U11)

BUILDING SUB AREA DETAILS

ID	Description	Area	Adj.	Effect.
OPU	OPEN PORCH	244	0.15	37
SPF	SCREEN PORCH	192	0.30	58
FFF	FST FLR FIN	1920	1.00	1920
BMF	BSMNT FINISHED	504	0.30	151
BMU	BSMNT	1150	0.15	173
CRL	CRAWL	266	0.00	0
DEK	DECK/ENTRANCE	176	0.10	18
GLA:	**1,920**	**4,452**		**2,357**

2013 BASE YEAR BUILDING VALUATION

Market Cost New: **$ 169,185**
Year Built: **1985**
Condition For Age: AVERAGE **13 %**
Physical:
Functional:
Economic:
Temporary:
Total Depreciation: **13 %**

Building Value: **$ 147,200**

OWNER INFORMATION

CAPONE, STEVEN R
CAPONE, LAURIE
4 ACORN DR

KINGSTON, NH 03848

SALES HISTORY

Date	Book	Page	Type	Price	Grantor
02/28/2002	3731	2844	Q I	230,000	PEARSON
03/01/2000	3457	2782	Q I	178,933	PARFITT

PICTURE

LISTING HISTORY

12/12/11	KCM
02/22/05	BW X
05/16/03	RW X

NOTES

C-8737. GREY. NEEDS NEW ROOF, 2/05 DORMERS IN-NVC-P/U OPU-BW, REMOVE EXTRA FEATURES, CORRECT SKETCH LABELING FOR FFF,DEK,& STO 12/11KC

EXTRA FEATURES VALUATION

Feature Type	Units	Lngth x Width	Size Adj	Rate	Cond	Market Value	Notes

MUNICIPAL SOFTWARE BY AVITAR

KINGSTON ASSESSING OFFICE

PARCEL TOTAL TAXABLE VALUE

Year	Building	Features	Land
2013	$ 161,600	$ 0	$ 83,700
		Parcel Total:	$ 245,300
2014	$ 161,600	$ 0	$ 83,700
		Parcel Total:	$ 245,300
2015	**$ 161,600**	**$ 0**	**$ 83,700**
		Parcel Total:	**$ 245,300**

LAND VALUATION

Zone: SFR SINGLE FAM RES **Minimum Acreage:** 1.84 **Minimum Frontage:** 200 **Site:** **Driveway:** **Road:**

Land Type	Units	Base Rate	NC	Adj	Site	Road	DWay	Topography	Cond	Ad Valorem	SPI	R	Tax Value	Notes
1F RES	1.840 ac	80,000	F	110	100	100	100		95	83,600	0	N	83,600	TOPO
1F RES	0.060 ac	x 2,000	X	100					50	100	0	N	100	TOPO
	1.900 ac									83,700			**83,700**	

Map: 000R23 **Lot: 000039** **Sub: 00000X** **Card: 1 of 1** **4 ACORN DR** **KINGSTON** **Printed: 12/17/2015**

PICTURE

OWNER

CAPONE, STEVEN R
CAPONE, LAURIE
4 ACORN DR

KINGSTON, NH 03848

TAXABLE DISTRICTS

District	Percentage

PERMITS

Date	Permit ID	Permit Type	Notes
06/10/04	R23-39	ADDITION	ADD THREE DORMERS TO

BUILDING DETAILS

Model: **1.75 STORY FRAME CAPE**
Roof: **GABLE HIP/ASPHALT**
Ext: **CLAP BOARD**
Int: **DRYWALL**
Floor: **HARDWOOD/CARPET**
Heat: **OIL/HOT WATER**
Bedrooms: **3** Baths: **2.0** Fixtures:
Extra Kitchens: Fireplaces:
A/C: **No** Generators:
Quality: **A1 AVG+10**
Com. Wall:
Size Adj: **0.9669** Base Rate: **RSA 80.00**
Bldg. Rate: **1.0214**
Sq. Foot Cost: **$ 81.71**

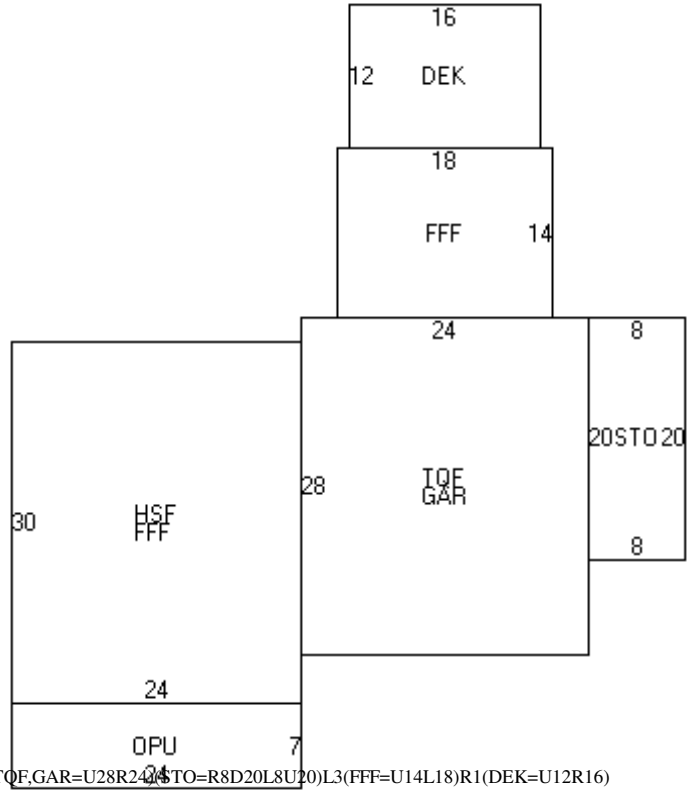

(HSF,FFF=D30R24)(OPU=D7L24)R24U11(TQF,GAR=U28R24)(STO=R8D20L8U20)L3(FFF=U14L18)R1(DEK=U12R16)

BUILDING SUB AREA DETAILS

ID	Description	Area	Adj.	Effect.
HSF	1/2 STRY FIN	720	0.50	360
FFF	FST FLR FIN	972	1.00	972
OPU	OPEN PORCH	168	0.15	25
TQF	3/4 STRY FIN	672	0.75	504
GAR	GARAGE	672	0.45	302
STO	STORAGE AREA	160	0.25	40
DEK	DECK/ENTRANCE	192	0.10	19
GLA:	**1,836**	**3,556**		**2,222**

2013 BASE YEAR BUILDING VALUATION

Market Cost New:		**$ 181,560**
Year Built:		**1980**
Condition For Age:	GOOD	**11 %**
Physical:		
Functional:		
Economic:		
Temporary:		
Total Depreciation:		**11 %**
Building Value:		**$ 161,600**