OWNER INFORMATION

WELLS FARGO BANK, NA

3476 STATEVIEW BLVD.

FT. MILL, SC 29715

SALES HISTORY

Date	Book	Page	Type	Price	Grantor
01/29/2016	5688	1411	U I 51	209,375	SAUNDERS, JANET
11/30/2015	5673	1617	U I 19		SAUNDERS, PETER
05/13/2004	4290	2242	U I 23		GEORGOPOULOS
03/18/2004	4251	2055	Q I	420,000	GEORGOPOULOS

PICTURE

LISTING HISTORY

07/24/12	KCML	ADJ COND & SKETCH LABE
05/08/03	BW O	

NOTES

D-7435. BLUE. POOL HEATER NON FUNCTIONAL.

EXTRA FEATURES VALUATION

Feature Type	Units	Lngth x Width	Size Adj	Rate	Cond	Market Value	Notes
FIREPLACE 1-1	1		100	3,000.00	100	3,000	
SHED-WOOD	240	20 x 12	127	10.00	90	2,743	
IN GRND POOL/VINYL	720	36 x 20	82	38.00	100	22,435	
						28,200	

MUNICIPAL SOFTWARE BY AVITAR

KINGSTON ASSESSING OFFICE

PARCEL TOTAL TAXABLE VALUE

Year	Building	Features	Land
2014	$ 318,600	$ 28,200	$ 88,700
		Parcel Total:	$ 435,500
2015	$ 318,600	$ 28,200	$ 88,700
		Parcel Total:	$ 435,500
2016	**$ 318,600**	**$ 28,200**	**$ 88,700**
		Parcel Total:	**$ 435,500**

LAND VALUATION

Zone: SFRAG SFR AGR **Minimum Acreage:** 1.84 **Minimum Frontage:** 200 **Site:** **Driveway:** **Road:**

Land Type	Units	Base Rate	NC	Adj	Site	Road	DWay	Topography	Cond	Ad Valorem	SPI	R	Tax Value	Notes
1F RES	1.840 ac	80,000	F	110	100	100	100		100	88,000	0	N	88,000	
1F RES	0.360 ac	x 2,000	X	100					100	700	0	N	700	
	2.200 ac									88,700			**88,700**	

Map: 000R39 **Lot: 000042** **Sub: 000000** **Card: 1 of 1** **2 KING PINE WAY** **KINGSTON** **Printed: 01/29/2016**

PICTURE

OWNER

WELLS FARGO BANK, NA

3476 STATEVIEW BLVD.

FT. MILL, SC 29715

TAXABLE DISTRICTS

District	Percentage

PERMITS

Date	Permit ID	Permit Type	Notes

BUILDING DETAILS

Model: **1.75 STORY FRAME CAPE**
Roof: **GABLE HIP/ASPHALT**
Ext: **CLAP BOARD**
Int: **DRYWALL**
Floor: **PINE/SOFT WD/CARPET**
Heat: **OIL/HOT WATER**
Bedrooms: **4** Baths: **3.5** Fixtures:
Extra Kitchens: Fireplaces:
A/C: **No** Generators:
Quality: **A3 AVG+30**
Com. Wall:
Size Adj: **0.8678** Base Rate: **RSA 80.00**
Bldg. Rate: **1.1057**
Sq. Foot Cost: **$ 88.46**

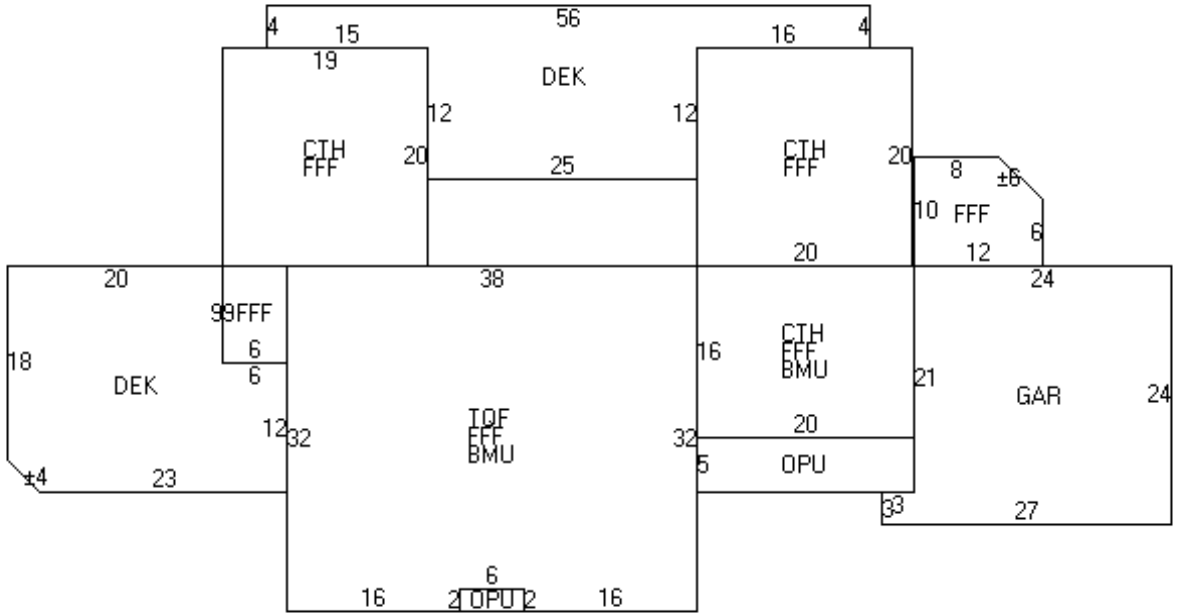

(DEK=L56D4R15D12R25U12R16U4)D4R4(CTH,FFF=D20L20)L25(CTH,FFF=U20L19)D20(FFF=D9R6)(DEK=D12L23[L3U3]U18R20D9R6)U9
(TQF,FFF,BMU=D32R16U2R6D2R16U32L38)D32R16(OPU=U2R6)D2R16U11(OPU=U5R20)(CTH,FFF,BMU=L20U16)R20(FFF=U10R8[R4D4]D
6L12)(GAR=D21L3D3R27U24L24)

BUILDING SUB AREA DETAILS

ID	Description	Area	Adj.	Effect.
DEK	DECK/ENTRANCE	1012	0.10	101
CTH	CATHEDRAL	1100	0.10	110
FFF	FST FLR FIN	2470	1.00	2470
TQF	3/4 STRY FIN	1204	0.75	903
BMU	BSMNT	1524	0.15	229
OPU	OPEN PORCH	112	0.15	17
GAR	GARAGE	585	0.45	263
GLA:	**3,373**	**8,007**		**4,093**

2013 BASE YEAR BUILDING VALUATION

Market Cost New:		**$ 362,067**
Year Built:		**1978**
Condition For Age:	GOOD	**12 %**
Physical:		
Functional:		
Economic:		
Temporary:		
Total Depreciation:		**12 %**
Building Value:		**$ 318,600**

OWNER INFORMATION

PRIEBE, CEDRIC J III
BANDERA, CHRISTINA A
18 SEAVIEW AVENUE

CRANSTON, RI 02905

SALES HISTORY

Date	Book	Page	Type	Price	Grantor
06/23/2015	5628	2919	Q I	252,400	BOTTICELLI, CATHERINE
08/15/2007	4833	1120	Q I	329,930	ST. PIERRE
06/12/2006	4666	1910	U I 38		ST. PIERRE

PICTURE

LISTING HISTORY

07/24/12	KCML	CORRECT LABELING, BTH (
05/08/03	BW X	

NOTES

D-7435. BLUE. ZIP +4 3115.

EXTRA FEATURES VALUATION

Feature Type	Units	Lngth x Width	Size Adj	Rate	Cond	Market Value	Notes
SHED-WOOD	160	10 x 16	160	10.00	90	2,304	
DECK DETACHED	336	24 x 14	108	10.00	65	2,359	
						4,700	

MUNICIPAL SOFTWARE BY AVITAR

KINGSTON ASSESSING OFFICE

PARCEL TOTAL TAXABLE VALUE

Year	Building	Features	Land
2014	$ 210,300	$ 4,700	$ 88,300
		Parcel Total:	$ 303,300
2015	$ 210,300	$ 4,700	$ 88,300
		Parcel Total:	$ 303,300
2016	**$ 210,300**	**$ 4,700**	**$ 88,300**
		Parcel Total:	**$ 303,300**

LAND VALUATION

Zone: SFRAG SFR AGR **Minimum Acreage:** 1.84 **Minimum Frontage:** 200 **Site:** **Driveway:** **Road:**

Land Type	Units	Base Rate	NC	Adj	Site	Road	DWay	Topography	Cond	Ad Valorem	SPI	R	Tax Value	Notes
1F RES	1.840 ac	80,000	F	110	100	100	100		100	88,000	0	N	88,000	
1F RES	0.160 ac	x 2,000	X	100					100	300	0	N	300	
	2.000 ac									88,300			**88,300**	

Map: 000R39 **Lot: 000043** **Sub: 000000** **Card: 1 of 1** **4 KING PINE WAY** **KINGSTON** **Printed: 01/29/2016**

PICTURE

OWNER

PRIEBE, CEDRIC J III
BANDERA, CHRISTINA A
18 SEAVIEW AVENUE

CRANSTON, RI 02905

TAXABLE DISTRICTS

District	Percentage

PERMITS

Date	Permit ID	Permit Type	Notes
08/28/09	R39-43	ALTERATION	INSTALL A NEW PELLET S

BUILDING DETAILS

Model: **2.00 STORY FRAME GARRISON**
Roof: **GABLE HIP/ASPHALT**
Ext: **CLAP BOARD**
Int: **DRYWALL**
Floor: **HARDWOOD/CARPET**
Heat: **ELECTRIC/RAD ELECT**
Bedrooms: **4** Baths: **2.5** Fixtures:
Extra Kitchens: Fireplaces:
A/C: **No** Generators:
Quality: **A2 AVG+20**
Com. Wall:
Size Adj: **0.9103** Base Rate: **RSA 80.00**
Bldg. Rate: **1.0170**
Sq. Foot Cost: **$ 81.36**

BUILDING SUB AREA DETAILS

ID	Description	Area	Adj.	Effect.
ATU	ATTIC	902	0.10	90
GAR	GARAGE	672	0.45	302
STO	STORAGE AREA	24	0.25	6
OPU	OPEN PORCH	30	0.15	5
FFF	FST FLR FIN	1256	1.00	1256
BMU	BSMNT	1256	0.15	188
DEK	DECK/ENTRANCE	318	0.10	32
UFF	UPPER FLR FIN	1064	1.00	1064
OPF	OPEN PORCH FIN	252	0.25	63
GLA:	**2,320**	**5,774**		**3,006**

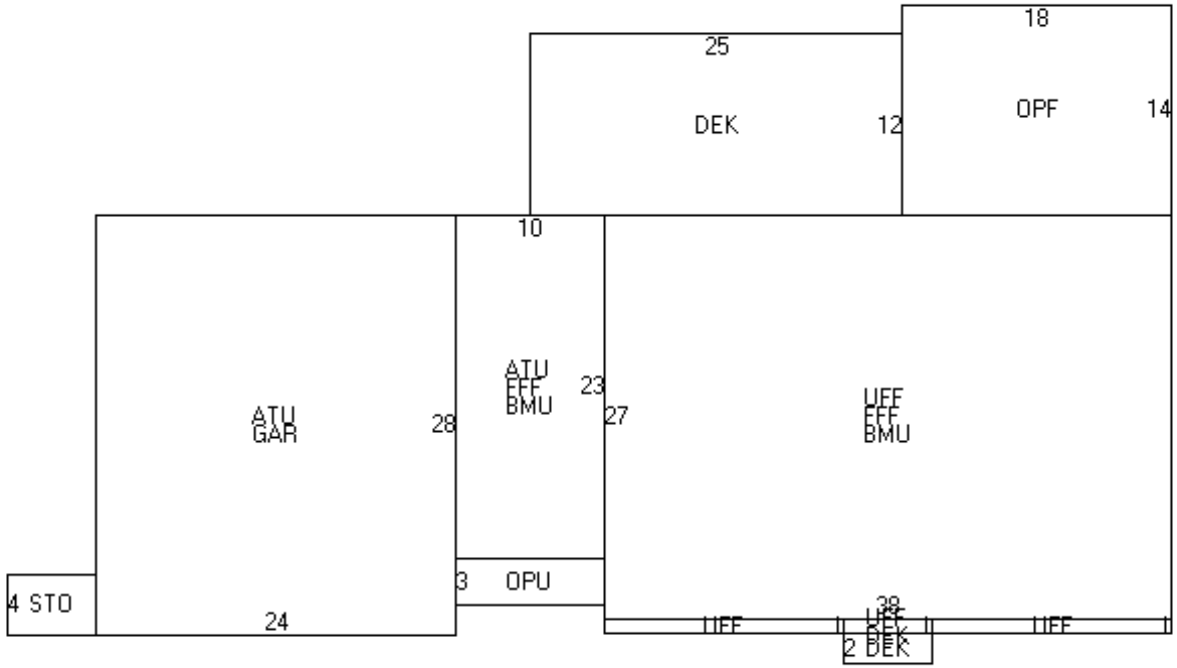

(ATU,GAR=D28L24)(STO=L6U4)R6D4R24U2(OPU=U3R10)(ATU,FFF,BMU=U23L10)R5U12(DEK=R25D12)L20(UFF,FFF,BMU=D27R38)(UFF=D1L16)(UFF,DEK=U1L6)(UFF=D1L16)R16(DEK=D2R6)U2R16U28(OPF=U14L18)

2013 BASE YEAR BUILDING VALUATION

Market Cost New:		**$ 244,568**
Year Built:		**1980**
Condition For Age:	AVERAGE	**14 %**
Physical:		
Functional:		
Economic:		
Temporary:		
Total Depreciation:		**14 %**
Building Value:		**$ 210,300**

OWNER INFORMATION

BOURBEAU, LISA L.
BROWN, CHRISTOPHER F
6 KING PINE WAY

KINGSTON, NH 03848

SALES HISTORY

Date	Book	Page	Type	Price	Grantor
08/31/2006	4702	1622	U I 38	203,000	BROWN
10/01/2001	3650	2280	Q I	330,000	PIERCE

PICTURE

LISTING HISTORY

07/24/12	KCM
08/04/03	BW O

NOTES

BROWN, SHOWER LEAK, SMALL AMT WTR DMG, POOL PLUMBING CRACKED, FPL NOT FUNCTIONING

EXTRA FEATURES VALUATION

Feature Type	Units	Lngth x Width	Size Adj	Rate	Cond	Market Value	Notes
FIREPLACE 1-1	1		100	3,000.00	0	0	
IN GRND POOL/GUNITE	648	36 x 18	85	45.00	60	14,872	
SHED-WOOD	80	10 x 8	260	10.00	60	1,248	
						16,100	

MUNICIPAL SOFTWARE BY AVITAR

KINGSTON ASSESSING OFFICE

PARCEL TOTAL TAXABLE VALUE

Year	Building	Features	Land
2014	$ 214,900	$ 16,100	$ 88,300
		Parcel Total:	$ 319,300
2015	$ 214,900	$ 16,100	$ 88,300
		Parcel Total:	$ 319,300
2016	**$ 214,900**	**$ 16,100**	**$ 88,300**
		Parcel Total:	**$ 319,300**

LAND VALUATION

Zone: SFRAG SFR AGR **Minimum Acreage:** 1.84 **Minimum Frontage:** 200 **Site:** **Driveway:** **Road:**

Land Type	Units	Base Rate	NC	Adj	Site	Road	DWay	Topography	Cond	Ad Valorem	SPI	R	Tax Value	Notes
1F RES	1.840 ac	80,000	F	110	100	100	100		100	88,000	0	N	88,000	
1F RES	0.160 ac	x 2,000	X	100					100	300	0	N	300	
	2.000 ac									88,300			**88,300**	

Map: 000R39 **Lot: 000044** **Sub: 000000** **Card: 1 of 1** **6 KING PINE WAY** **KINGSTON** **Printed: 01/29/2016**

PICTURE

OWNER

BOURBEAU, LISA L.
BROWN, CHRISTOPHER F
6 KING PINE WAY

KINGSTON, NH 03848

TAXABLE DISTRICTS

District	Percentage

PERMITS

Date	Permit ID	Permit Type	Notes

BUILDING DETAILS

Model: **2.00 STORY FRAME GARRISON**
Roof: **GABLE HIP/ASPHALT**
Ext: **CLAP BOARD**
Int: **DRYWALL**
Floor: **HARDWOOD/CARPET**
Heat: **OIL/HOT WATER**
Bedrooms: **4** Baths: **2.5** Fixtures:
Extra Kitchens: Fireplaces:
A/C: **No** Generators:
Quality: **A2 AVG+20**
Com. Wall:
Size Adj: **0.9169** Base Rate: **RSA 80.00**
Bldg. Rate: **1.0567**
Sq. Foot Cost: **$ 84.54**

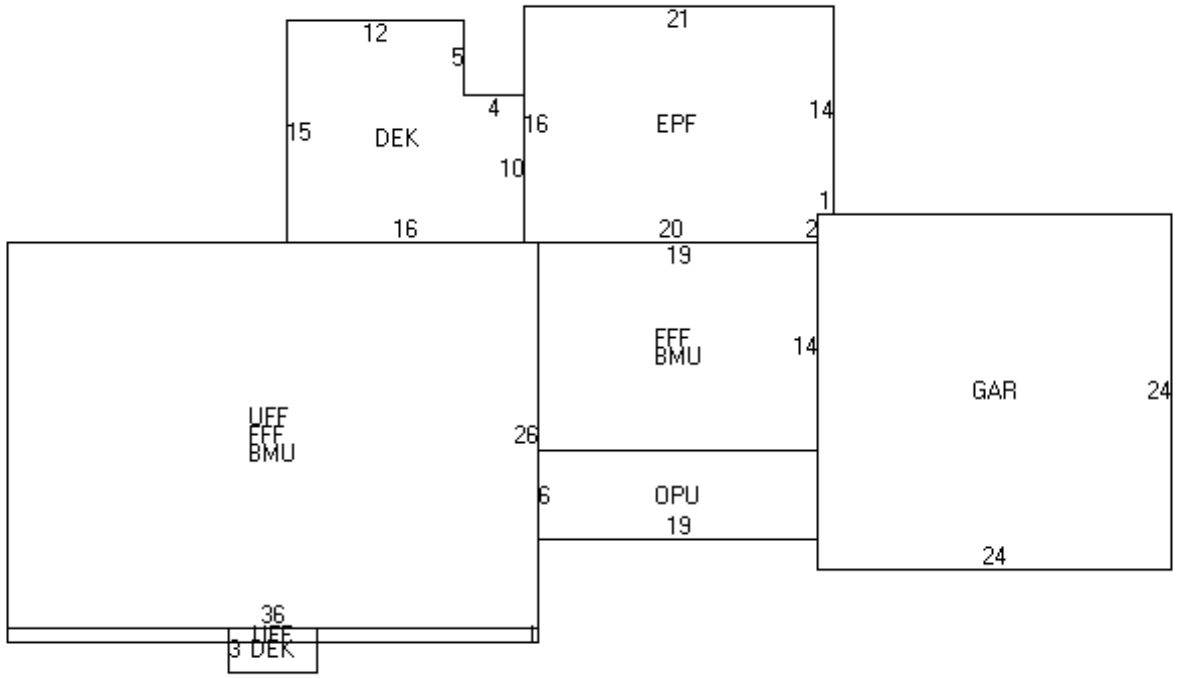

(UFF,FFF,BMU=D26L36)R15(DEK=D3R6)U3R15(UFF=D1L36)U27R19(DEK=U15R12D5R4D10L16)R16(EPF=U16R21D14L1D2L20)R1(FFF,BMU=R19D14)L19(OPU=D6R19)D2(GAR=R24U24)

BUILDING SUB AREA DETAILS

ID	Description	Area	Adj.	Effect.
UFF	UPPER FLR FIN	972	1.00	972
FFF	FST FLR FIN	1202	1.00	1202
BMU	BSMNT	1202	0.15	180
DEK	DECK/ENTRANCE	238	0.10	24
EPF	ENCLSD PORCH	334	0.70	234
OPU	OPEN PORCH	114	0.15	17
GAR	GARAGE	576	0.45	259
GLA:	**2,408**	**4,638**		**2,888**

2013 BASE YEAR BUILDING VALUATION

Market Cost New:		**$ 244,152**
Year Built:		**1976**
Condition For Age:	GOOD	**12 %**
Physical:		
Functional:		
Economic:		
Temporary:		
Total Depreciation:		**12 %**
Building Value:		**$ 214,900**

OWNER INFORMATION

REILLY, PETER M.
REILLY, LISA A.
8 KING PINE WAY

KINGSTON, NH 03848-3115

SALES HISTORY

Date	Book	Page	Type	Price	Grantor
03/04/2005	4445	2883	Q I	509,900	SULLIVAN, KIERAN J.

PICTURE

LISTING HISTORY

03/10/14 KCPU
07/24/12 KCML
05/08/03 BW O

NOTES

CREAM, CHNG SIDING, BDRM COUNT, & LABELING 7/12KC, IG POOL & SHED COMP 3/14KC

EXTRA FEATURES VALUATION

Feature Type	Units	Lngth x Width	Size Adj	Rate	Cond	Market Value	Notes
FIREPLACE 1-1	1		100	3,000.00	100	3,000	
IN GRND POOL/VINYL	648	18 x 36	85	38.00	100	20,930	
SHED-WOOD	162	9 x 18	159	10.00	100	2,576	
						26,500	

MUNICIPAL SOFTWARE BY AVITAR

KINGSTON ASSESSING OFFICE

PARCEL TOTAL TAXABLE VALUE

Year	Building	Features	Land
2014	$ 315,600	$ 26,500	$ 88,300
		Parcel Total:	$ 430,400
2015	$ 315,600	$ 26,500	$ 88,300
		Parcel Total:	$ 430,400
2016	**$ 315,600**	**$ 26,500**	**$ 88,300**
		Parcel Total:	**$ 430,400**

LAND VALUATION

Zone: SFRAG SFR AGR **Minimum Acreage:** 1.84 **Minimum Frontage:** 200 **Site:** **Driveway:** **Road:**

Land Type	Units	Base Rate	NC	Adj	Site	Road	DWay	Topography	Cond	Ad Valorem	SPI	R	Tax Value	Notes
1F RES	1.840 ac	80,000	F	110	100	100	100		100	88,000	0	N	88,000	
1F RES	0.160 ac	x 2,000	X	100					100	300	0	N	300	
	2.000 ac									88,300			**88,300**	

Map: 000R39 Lot: 000045 Sub: 000000 Card: 1 of 1 8 KING PINE WAY KINGSTON Printed: 01/29/2016

PICTURE

OWNER

REILLY, PETER M.
REILLY, LISA A.
8 KING PINE WAY

KINGSTON, NH 03848-3115

TAXABLE DISTRICTS

District	Percentage

PERMITS

Date	Permit ID	Permit Type	Notes
05/19/15	R39-45	ELECTRIC PERMIT	GENERATOR 20 KW
09/10/13	R39-45	NEW BUILDING	9 X 18 SHED
05/22/13	R39-45	ELECTRIC PERMIT	WIRE INGROUND POOL
04/16/13	R39-45	EXTERIOR ONLY	INGROUND POOL 18 X 36

BUILDING DETAILS

Model: **2.75 STORY FRAME GARRISON**
Roof: **GABLE HIP/ASPHALT**
Ext: **CEDAR/REDWD**
Int: **DRYWALL**
Floor: **HARDWOOD/CARPET**
Heat: **OIL/HOT WATER**
Bedrooms: **3** Baths: **2.5** Fixtures:
Extra Kitchens: Fireplaces:
A/C: **No** Generators:
Quality: **A2 AVG+20**
Com. Wall:
Size Adj: **0.8573** Base Rate: **RSA 80.00**
Bldg. Rate: **0.9979**
Sq. Foot Cost: **$ 79.83**

BUILDING SUB AREA DETAILS

ID	Description	Area	Adj.	Effect.
TQF	3/4 STRY FIN	784	0.75	588
UFF	UPPER FLR FIN	1276	1.00	1276
FFF	FST FLR FIN	1768	1.00	1768
BMU	BSMNT	1552	0.15	233
CTH	CATHEDRAL	768	0.10	77
DEK	DECK/ENTRANCE	264	0.10	26
HSU	1/2 STRY UNFIN	672	0.25	168
GAR	GARAGE	672	0.45	302
STO	STORAGE AREA	168	0.25	42
OPU	OPEN PORCH	80	0.15	12
GLA:	**3,632**	**8,004**		**4,492**

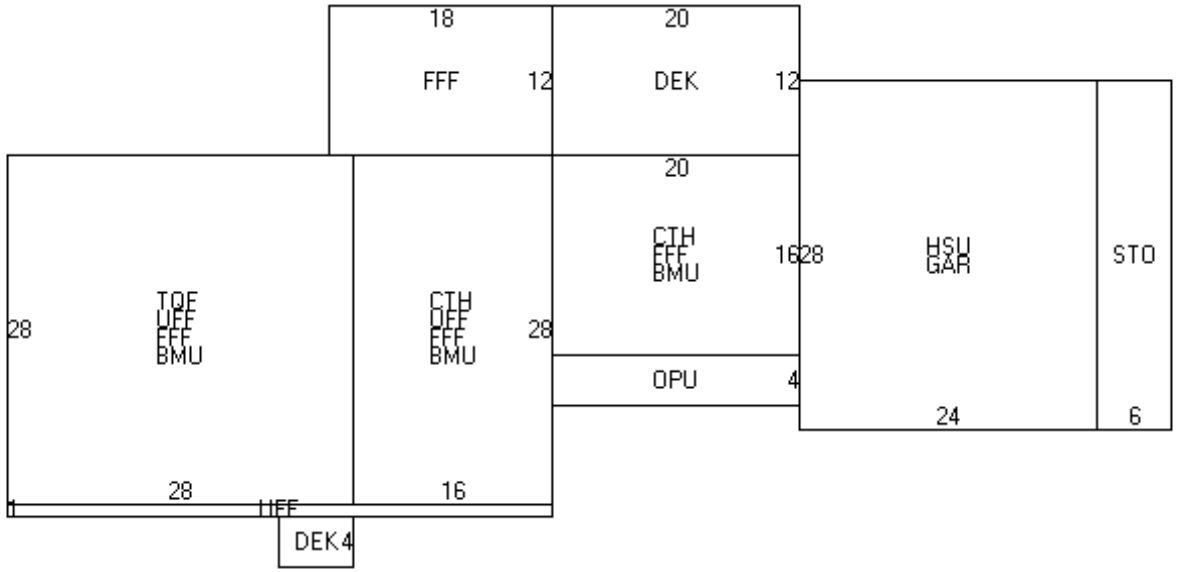

(TQF,UFF,FFF,BMU=D28R28)(CTH,UFF,FFF,BMU=R16U28)(FFF=U12L18)D12L26D28(UFF=D1R44)L16(DEK=D4L6)R22U33(CTH,FFF,BMU=R20D16)U16(DEK=U12L20)R20D6(HSU,GAR=D28R24)(STO=R6U28)L30D22(OPU=D4L20)

2013 BASE YEAR BUILDING VALUATION

Market Cost New:		**$ 358,596**
Year Built:		**1978**
Condition For Age:	GOOD	**12 %**
Physical:		
Functional:		
Economic:		
Temporary:		
Total Depreciation:		**12 %**
Building Value:		**$ 315,600**

OWNER INFORMATION

MCCOLGAN, WILLIAM J.
MCKENNA, SARAH E.
10 KING PINE WAY

KINGSTON, NH 03848

SALES HISTORY

Date	Book	Page	Type	Price	Grantor
07/07/2010	5124	1883	Q I	337,533	NIX, RALPH H
04/01/1985	2539	2833	U I 82		DHS HOMES, INC.

PICTURE

LISTING HISTORY

07/24/12	KCM
04/27/04	JR X
05/16/03	KJ O
05/08/03	BW X

NOTES

GREY. D-7435. PORCH FNDT. ONLY, RECHECK 2005, 3/05 EST ADDTN 100%-BW. CHNG LABELING & SIDING 7/12KC

EXTRA FEATURES VALUATION

Feature Type	Units	Lngth x Width	Size Adj	Rate	Cond	Market Value	Notes
FIREPLACE 1-1	1		100	3,000.00	100	3,000	
SHED-WOOD	240	20 x 12	127	10.00	80	2,438	
						5,400	

MUNICIPAL SOFTWARE BY AVITAR

KINGSTON ASSESSING OFFICE

PARCEL TOTAL TAXABLE VALUE

Year	Building	Features	Land
2014	$ 221,400	$ 5,400	$ 88,300
		Parcel Total:	$ 315,100
2015	$ 221,400	$ 5,400	$ 88,300
		Parcel Total:	$ 315,100
2016	**$ 221,400**	**$ 5,400**	**$ 88,300**
		Parcel Total:	**$ 315,100**

LAND VALUATION

Zone: SFRAG SFR AGR **Minimum Acreage:** 1.84 **Minimum Frontage:** 200 **Site:** **Driveway:** **Road:**

Land Type	Units	Base Rate	NC	Adj	Site	Road	DWay	Topography	Cond	Ad Valorem	SPI	R	Tax Value	Notes
1F RES	1.840 ac	80,000	F	110	100	100	100		100	88,000	0	N	88,000	
1F RES	0.160 ac	x 2,000	X	100					100	300	0	N	300	
	2.000 ac									88,300			**88,300**	

Map: 000R39 **Lot: 000046** **Sub: 000000** **Card: 1 of 1** **10 KING PINE WAY** **KINGSTON** **Printed: 01/29/2016**

PICTURE

OWNER

MCCOLGAN, WILLIAM J.
MCKENNA, SARAH E.
10 KING PINE WAY

KINGSTON, NH 03848

TAXABLE DISTRICTS

District	Percentage

PERMITS

Date	Permit ID	Permit Type	Notes
05/23/13	R39-46	ELECTRIC PERMIT	WIRE GENERATOR
03/29/04	R39-46	BLDG.	THREE SEASON SUN PORC

BUILDING DETAILS

Model: **2.00 STORY FRAME COLONIAL**
Roof: **GABLE HIP/ASPHALT**
Ext: **CEDAR/REDWD**
Int: **DRYWALL**
Floor: **LINOLEUM OR SIM/CARPET**
Heat: **OIL/HOT WATER**
Bedrooms: **3** Baths: **2.5** Fixtures:
Extra Kitchens: Fireplaces:
A/C: **Yes 100.00 %** Generators:
Quality: **A2 AVG+20**
Com. Wall:
Size Adj: **0.9185** Base Rate: **RSA 80.00**
Bldg. Rate: **1.1126**
Sq. Foot Cost: **$ 89.00**

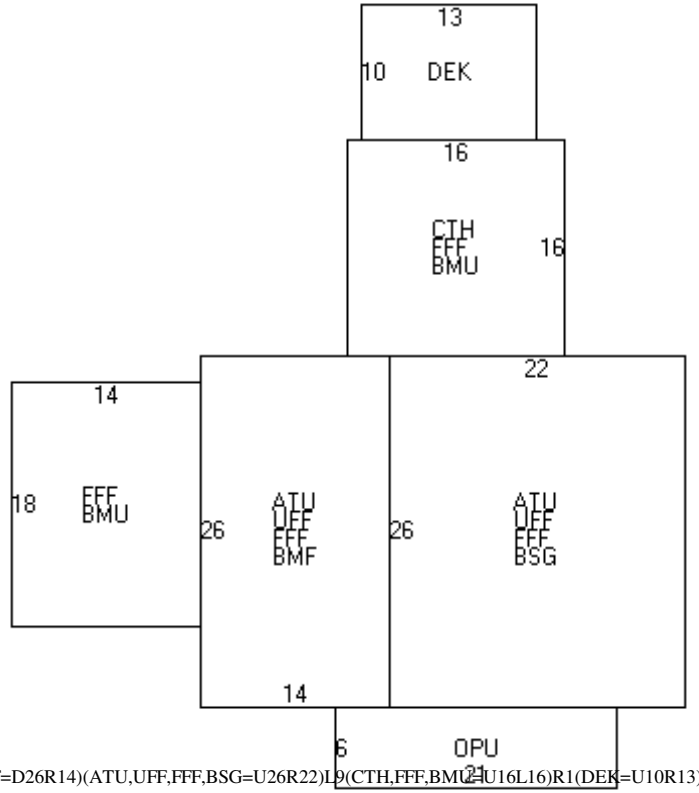

(FFF,BMU=U18R14)U2(ATU,UFF,FFF,BMF=D26R14)(ATU,UFF,FFF,BSG=U26R22)L9(CTH,FFF,BMU=U16L16)R1(DEK=U10R13)D52L15(OPU=D6R21)

BUILDING SUB AREA DETAILS

ID	Description	Area	Adj.	Effect.
FFF	FST FLR FIN	1444	1.00	1444
BMU	BSMNT	508	0.15	76
ATU	ATTIC	936	0.10	94
UFF	UPPER FLR FIN	936	1.00	936
BMF	BSMNT FINISHED	364	0.30	109
BSG	BSMT GAR	572	0.25	143
CTH	CATHEDRAL	256	0.10	26
DEK	DECK/ENTRANCE	130	0.10	13
OPU	OPEN PORCH	126	0.15	19
GLA:	**2,380**	**5,272**		**2,860**

2013 BASE YEAR BUILDING VALUATION

Market Cost New:		**$ 254,540**
Year Built:		**1985**
Condition For Age:	AVERAGE	**13 %**
Physical:		
Functional:		
Economic:		
Temporary:		
Total Depreciation:		**13 %**
Building Value:		**$ 221,400**

OWNER INFORMATION

YOUNG, KURT R
YOUNG, DIANA L
12 KING PINE WAY

KINGSTON, NH 03848-3115

SALES HISTORY

Date	Book	Page	Type	Price	Grantor
08/16/2005	4532	0941	Q I	360,000	JACKSON

PICTURE

LISTING HISTORY

07/24/12 KCM
05/08/03 BW O

NOTES

GREY, (CHANGES MADE @ HEARINGS---BL), CORRECT LABELING, SIDING & DEK AREA 7/12KC

EXTRA FEATURES VALUATION

Feature Type	Units	Lngth x Width	Size Adj	Rate	Cond	Market Value	Notes
FIREPLACE 1-1	1		100	3,000.00	100	3,000	
						3,000	

MUNICIPAL SOFTWARE BY AVITAR

KINGSTON ASSESSING OFFICE

PARCEL TOTAL TAXABLE VALUE

Year	Building	Features	Land
2014	$ 207,000	$ 3,000	$ 88,200
		Parcel Total:	$ 298,200
2015	$ 207,000	$ 3,000	$ 88,200
		Parcel Total:	$ 298,200
2016	**$ 207,000**	**$ 3,000**	**$ 88,200**
		Parcel Total:	**$ 298,200**

LAND VALUATION

Zone: SFRAG SFR AGR **Minimum Acreage:** 1.84 **Minimum Frontage:** 200 **Site:** **Driveway:** **Road:**

Land Type	Units	Base Rate	NC	Adj	Site	Road	DWay	Topography	Cond	Ad Valorem	SPI	R	Tax Value	Notes
1F RES	1.840 ac	80,000	F	110	100	100	100		100	88,000	0	N	88,000	
1F RES	0.120 ac	x 2,000	X	100					100	200	0	N	200	
	1.960 ac									88,200			**88,200**	

Map: 000R39 **Lot: 000047** **Sub: 000000** **Card: 1 of 1** **12 KING PINE WAY** **KINGSTON** **Printed: 01/29/2016**

PICTURE

OWNER

YOUNG, KURT R
YOUNG, DIANA L
12 KING PINE WAY

KINGSTON, NH 03848-3115

TAXABLE DISTRICTS

District	Percentage

PERMITS

Date	Permit ID	Permit Type	Notes

BUILDING DETAILS

Model: **2.00 STORY FRAME COLONIAL**
Roof: **GABLE HIP/ASPHALT**
Ext: **CEDAR/REDWD**
Int: **DRYWALL**
Floor: **HARDWOOD/CARPET**
Heat: **OIL/HOT WATER**
Bedrooms: **3** Baths: **2.5** Fixtures:
Extra Kitchens: Fireplaces:
A/C: **No** Generators:
Quality: **A2 AVG+20**
Com. Wall:
Size Adj: **0.9316** Base Rate: **RSA 80.00**
Bldg. Rate: **1.0956**
Sq. Foot Cost: **$ 87.64**

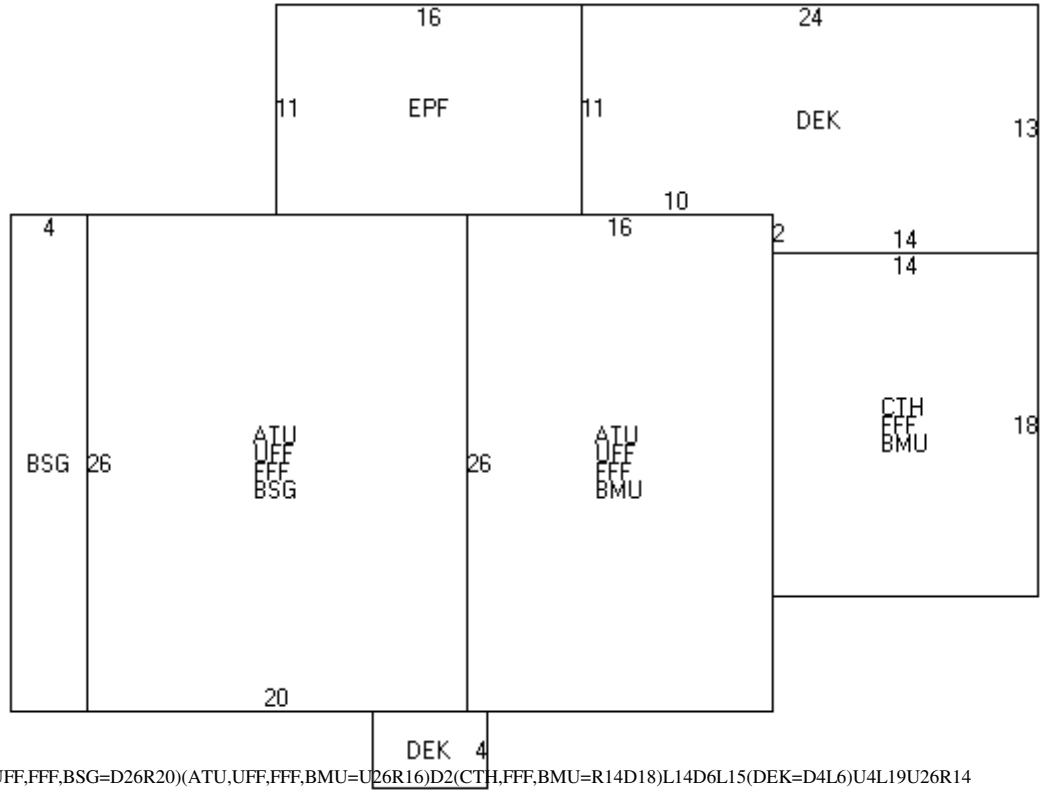

(BSG=U26R4)(ATU,UFF,FFF,BSG=D26R20)(ATU,UFF,FFF,BMU=U26R16)D2(CTH,FFF,BMU=R14D18)L14D6L15(DEK=D4L6)U4L19U26R14
(EPF=U11R16)(DEK=D11R10D2R14U13L24)

BUILDING SUB AREA DETAILS

ID	Description	Area	Adj.	Effect.
BSG	BSMT GAR	624	0.25	156
ATU	ATTIC	936	0.10	94
UFF	UPPER FLR FIN	936	1.00	936
FFF	FST FLR FIN	1188	1.00	1188
BMU	BSMNT	668	0.15	100
CTH	CATHEDRAL	252	0.10	25
DEK	DECK/ENTRANCE	316	0.10	32
EPF	ENCLSD PORCH	176	0.70	123
GLA:	**2,247**	**5,096**		**2,654**

2013 BASE YEAR BUILDING VALUATION

Market Cost New:		**$ 232,597**
Year Built:		**1985**
Condition For Age:	GOOD	**11 %**
Physical:		
Functional:		
Economic:		
Temporary:		
Total Depreciation:		**11 %**
Building Value:		**$ 207,000**

OWNER INFORMATION

DOBROWOLSKI, VICTORIA B.

14 KING PINE WAY

KINGSTON, NH 03848

SALES HISTORY

Date	Book	Page	Type	Price	Grantor
09/14/2004	4361	1814	U I 38	138,267	LAMB

PICTURE

LISTING HISTORY

07/24/12 KCML
05/08/03 BW O

NOTES

WHITE, CORRECT DEK & ADD PATIO 7/12KC

EXTRA FEATURES VALUATION

Feature Type	Units	Lngth x Width	Size Adj	Rate	Cond	Market Value	Notes
FIREPLACE 1-1	1		100	3,000.00	100	3,000	
SHED-WOOD	80	8 x 10	260	10.00	65	1,352	
						4,400	

MUNICIPAL SOFTWARE BY AVITAR

KINGSTON ASSESSING OFFICE

PARCEL TOTAL TAXABLE VALUE

Year	Building	Features	Land
2014	$ 203,400	$ 4,400	$ 75,000
		Parcel Total:	$ 282,800
2015	$ 203,400	$ 4,400	$ 75,000
		Parcel Total:	$ 282,800
2016	**$ 203,400**	**$ 4,400**	**$ 75,000**
		Parcel Total:	**$ 282,800**

LAND VALUATION

Zone: SFRAG SFR AGR **Minimum Acreage:** 1.84 **Minimum Frontage:** 200 **Site:** **Driveway:** **Road:**

Land Type	Units	Base Rate	NC	Adj	Site	Road	DWay	Topography	Cond	Ad Valorem	SPI	R	Tax Value	Notes
1F RES	1.840 ac	80,000	F	110	100	100	100		85	74,800	0	N	74,800	TOPO
1F RES	0.160 ac	x 2,000	X	100					50	200	0	N	200	TOPO
	2.000 ac									75,000			**75,000**	

Map: 000R39 **Lot: 000048** **Sub: 000000** **Card: 1 of 1** **14 KING PINE WAY** **KINGSTON** **Printed: 01/29/2016**

PICTURE

OWNER

DOBROWOLSKI, VICTORIA B.

14 KING PINE WAY

KINGSTON, NH 03848

TAXABLE DISTRICTS

District	Percentage

PERMITS

Date	Permit ID	Permit Type	Notes

BUILDING DETAILS

Model: **1.75 STORY FRAME CAPE**
Roof: **GABLE HIP/ASPHALT**
Ext: **VINYL SIDING**
Int: **DRYWALL**
Floor: **HARDWOOD**
Heat: **OIL/HOT WATER**
Bedrooms: **4** Baths: **3.0** Fixtures:
Extra Kitchens: Fireplaces:
A/C: **No** Generators:
Quality: **A2 AVG+20**
Com. Wall:
Size Adj: **0.9381** Base Rate: **RSA 80.00**
Bldg. Rate: **1.1145**
Sq. Foot Cost: **$ 89.16**

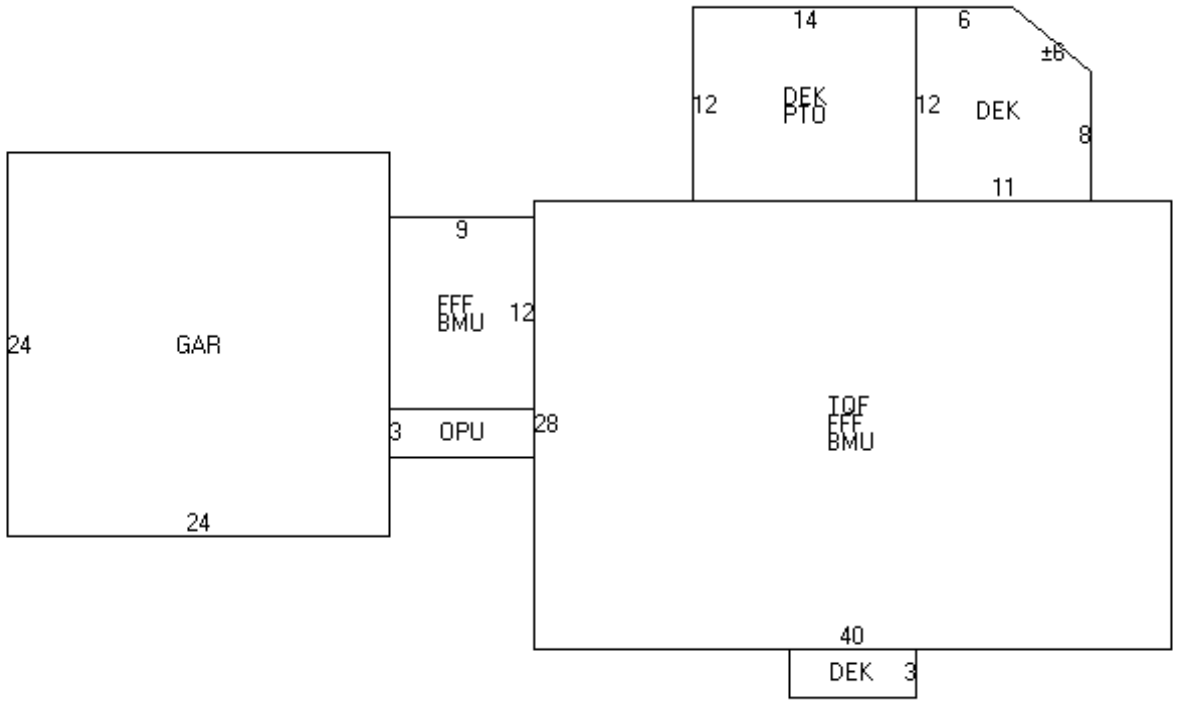

(GAR=D24R24)U5(OPU=U3R9)(FFF,BMU=U12L9)R9U1(TQF,FFF,BMU=D28R40)L16(DEK=D3L8)U3L16U28R10(DEK,PTO=U12R14)(DEK=D12R11U8[U4L5]L6)

BUILDING SUB AREA DETAILS

ID	Description	Area	Adj.	Effect.
GAR	GARAGE	576	0.45	259
OPU	OPEN PORCH	27	0.15	4
FFF	FST FLR FIN	1228	1.00	1228
BMU	BSMNT	1228	0.15	184
TQF	3/4 STRY FIN	1120	0.75	840
DEK	DECK/ENTRANCE	314	0.10	31
PTO	PATIO	168	0.10	17
GLA:	**2,068**	**4,661**		**2,563**

2013 BASE YEAR BUILDING VALUATION

Market Cost New:		**$ 228,517**
Year Built:		**1985**
Condition For Age:	GOOD	**11 %**
Physical:		
Functional:		
Economic:		
Temporary:		
Total Depreciation:		**11 %**
Building Value:		**$ 203,400**

OWNER INFORMATION

FARRINGTON, STEPHEN D
FARRINGTON, SHARON
13 KING PINE WAY

KINGSTON, NH 03848

SALES HISTORY

Date	Book	Page	Type	Price	Grantor

PICTURE

LISTING HISTORY

07/25/12	KCML
05/20/03	SH O
05/08/03	BW X

NOTES

GREEN, CHNG SIDING, LABELING, STORY HEIGHT, BDRM COUNT, & COND 7/12KC

EXTRA FEATURES VALUATION

Feature Type	Units	Lngth x Width	Size Adj	Rate	Cond	Market Value	Notes
FIREPLACE 1-1	1		100	3,000.00	100	3,000	
IN GRND POOL/GUNITE	648	18 x 36	85	45.00	80	19,829	
						22,800	

MUNICIPAL SOFTWARE BY AVITAR

KINGSTON ASSESSING OFFICE

PARCEL TOTAL TAXABLE VALUE

Year	Building	Features	Land
2014	$ 220,800	$ 22,800	$ 88,200
		Parcel Total:	$ 331,800
2015	$ 220,800	$ 22,800	$ 88,200
		Parcel Total:	$ 331,800
2016	**$ 220,800**	**$ 22,800**	**$ 88,200**
		Parcel Total:	**$ 331,800**

LAND VALUATION

Zone: SFRAG SFR AGR **Minimum Acreage:** 1.84 **Minimum Frontage:** 200 **Site:** **Driveway:** **Road:**

Land Type	Units	Base Rate	NC	Adj	Site	Road	DWay	Topography	Cond	Ad Valorem	SPI	R	Tax Value	Notes
1F RES	1.840 ac	80,000	F	110	100	100	100		100	88,000	0	N	88,000	
1F RES	0.160 ac	x 2,000	X	100					50	200	0	N	200	TOPO
	2.000 ac									88,200			**88,200**	

PICTURE

OWNER

FARRINGTON, STEPHEN D
FARRINGTON, SHARON
13 KING PINE WAY

KINGSTON, NH 03848

TAXABLE DISTRICTS

District	Percentage

PERMITS

Date	Permit ID	Permit Type	Notes

BUILDING DETAILS

Model: **2.00 STORY FRAME GARRISON**
Roof: **GABLE HIP/ASPHALT**
Ext: **CEDAR/REDWD**
Int: **DRYWALL**
Floor: **HARDWOOD/CARPET**
Heat: **OIL/HOT WATER**
Bedrooms: **3** Baths: **2.5** Fixtures:
Extra Kitchens: Fireplaces:
A/C: **No** Generators:
Quality: **A2 AVG+20**
Com. Wall:
Size Adj: **0.9177** Base Rate: **RSA 80.00**
Bldg. Rate: **1.0792**
Sq. Foot Cost: **$ 86.34**

BUILDING SUB AREA DETAILS

ID	Description	Area	Adj.	Effect.
ATU	ATTIC	1820	0.10	182
UFF	UPPER FLR FIN	972	1.00	972
FFF	FST FLR FIN	1244	1.00	1244
BMU	BSMNT	1244	0.15	187
DEK	DECK/ENTRANCE	184	0.10	18
OPU	OPEN PORCH	42	0.15	6
GAR	GARAGE	576	0.45	259
STO	STORAGE AREA	24	0.25	6
GLA:	**2,216**	**6,106**		**2,874**

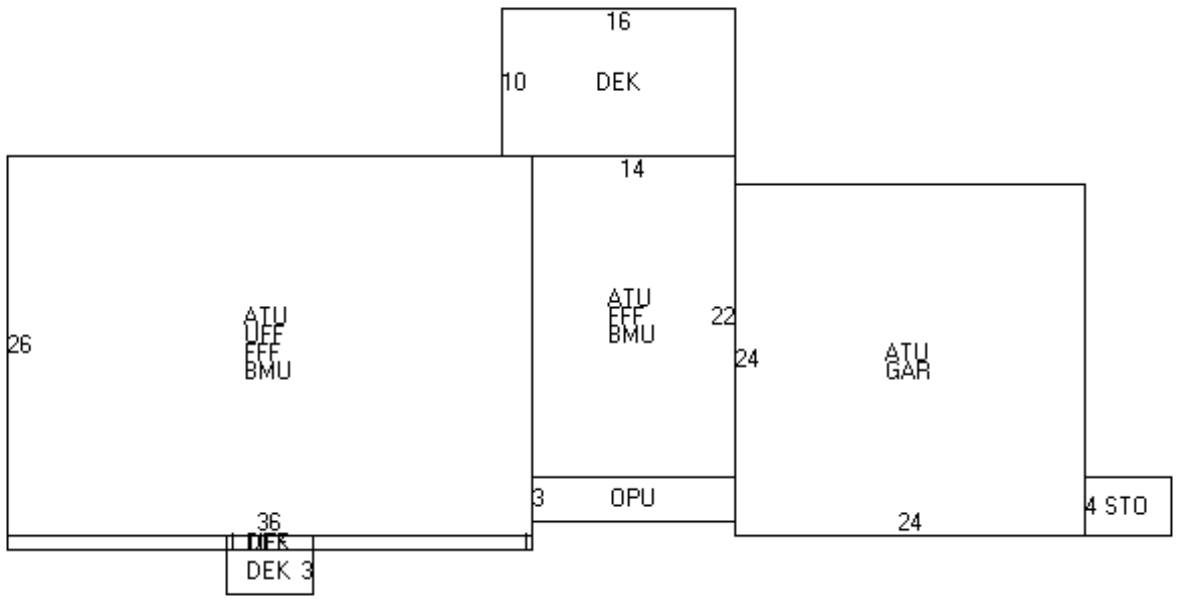

(ATU,UFF,FFF,BMU=D26R36)(UFF=D1L36)R15(DEK=U1R6)D1(DEK=D3L6)R6U3R15U2(OPU=U3R14)(ATU,FFF,BMU=U22L14)L2(DEK=U10R16)D12(ATU,GAR=D24R24)(STO=U4R6)

2013 BASE YEAR BUILDING VALUATION

Market Cost New:		**$ 248,141**
Year Built:		**1985**
Condition For Age:	GOOD	**11 %**
Physical:		
Functional:		
Economic:		
Temporary:		
Total Depreciation:		**11 %**
Building Value:		**$ 220,800**

OWNER INFORMATION

ALLEN, RICHARD S.

11 KING PINE WAY

KINGSTON, NH 03848

SALES HISTORY

Date	Book	Page	Type	Price	Grantor
11/12/2010	5164	1945	Q I	304,600	BARTRAM, RICHARD J
10/16/2008	4956	1549	Q I	318,000	LOPES, EDWARD P

PICTURE

LISTING HISTORY

07/25/12 KCML
05/08/03 BW O LIST FOR REVAL

NOTES

D-7435 (LOT 19 ON PLAN). YELLOW. DRAINAGE EASEMENT- NOT ON MAP.
CHNG HEAT FUEL, STORY HEOGHT, LABELING & COND, ADD SHED 7/12KC

EXTRA FEATURES VALUATION

Feature Type	Units	Lngth x Width	Size Adj	Rate	Cond	Market Value	Notes
FIREPLACE 1-1	1		100	3,000.00	100	3,000	
SHED-WOOD	160	10 x 16	160	10.00	100	2,560	
						5,600	

MUNICIPAL SOFTWARE BY AVITAR

KINGSTON ASSESSING OFFICE

PARCEL TOTAL TAXABLE VALUE

Year	Building	Features	Land
2014	$ 192,000	$ 5,600	$ 88,300
		Parcel Total:	$ 285,900
2015	$ 192,000	$ 5,600	$ 88,300
		Parcel Total:	$ 285,900
2016	**$ 192,000**	**$ 5,600**	**$ 88,300**
		Parcel Total:	**$ 285,900**

LAND VALUATION

Zone: SFRAG SFR AGR **Minimum Acreage:** 1.84 **Minimum Frontage:** 200 **Site:** **Driveway:** **Road:**

Land Type	Units	Base Rate	NC	Adj	Site	Road	DWay	Topography	Cond	Ad Valorem	SPI	R	Tax Value	Notes
1F RES	1.840 ac	80,000	F	110	100	100	100		100	88,000	0	N	88,000	
1F RES	0.160 ac	x 2,000	X	100					100	300	0	N	300	
	2.000 ac									88,300			**88,300**	

Map: 000R39 **Lot: 000050** **Sub: 000000** **Card: 1 of 1** **11 KING PINE WAY** **KINGSTON** **Printed: 01/29/2016**

PICTURE

OWNER

ALLEN, RICHARD S.

11 KING PINE WAY

KINGSTON, NH 03848

TAXABLE DISTRICTS

District	Percentage

PERMITS

Date	Permit ID	Permit Type	Notes
05/21/85	114254-A	SEPTIC	APPROVAL FOR OPERATIC
04/15/85	R39-50	NEW BUILDING	36' X 26' HOUSE
08/20/84	114254	SEPTIC	APPROVAL FOR CONSTRU

BUILDING DETAILS

Model: **2.00 STORY FRAME COLONIAL**
Roof: **GABLE HIP/ASPHALT**
Ext: **VINYL SIDING**
Int: **DRYWALL**
Floor: **CARPET**
Heat: **GAS/HOT WATER**
Bedrooms: **3** Baths: **2.5** Fixtures:
Extra Kitchens: Fireplaces:
A/C: **No** Generators:
Quality: **A2 AVG+20**
Com. Wall:
Size Adj: **0.9446** Base Rate: **RSA 80.00**
Bldg. Rate: **1.0886**
Sq. Foot Cost: **$ 87.09**

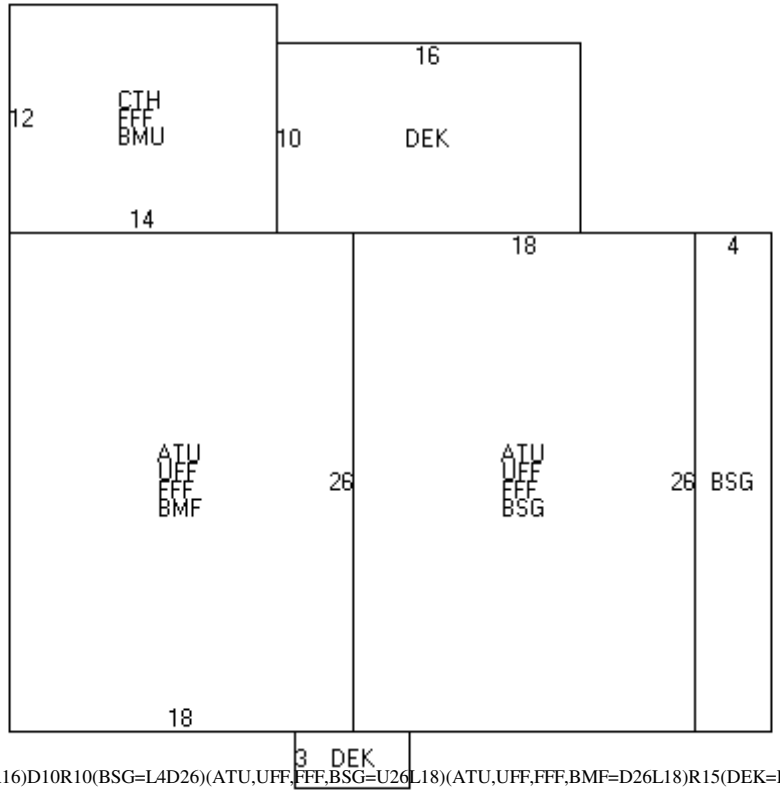

(CTH,FFF,BMU=D12R14)(DEK=U10R16)D10R10(BSG=L4D26)(ATU,UFF,FFF,BSG=U26L18)(ATU,UFF,FFF,BMF=D26L18)R15(DEK=D3R6)

BUILDING SUB AREA DETAILS

ID	Description	Area	Adj.	Effect.
CTH	CATHEDRAL	168	0.10	17
FFF	FST FLR FIN	1104	1.00	1104
BMU	BSMNT	168	0.15	25
DEK	DECK/ENTRANCE	178	0.10	18
BSG	BSMT GAR	572	0.25	143
ATU	ATTIC	936	0.10	94
UFF	UPPER FLR FIN	936	1.00	936
BMF	BSMNT FINISHED	468	0.30	140
GLA:	**2,040**	**4,530**		**2,477**

2013 BASE YEAR BUILDING VALUATION

Market Cost New:		**$ 215,722**
Year Built:		**1985**
Condition For Age:	GOOD	**11 %**
Physical:		
Functional:		
Economic:		
Temporary:		
Total Depreciation:		**11 %**
Building Value:		**$ 192,000**

OWNER INFORMATION

IRISH, DIANA L
DIANA L IRISH REV TRUST
9 KING PINE WAY

KINGSTON, NH 03848

SALES HISTORY

Date	Book	Page	Type	Price	Grantor
05/19/2014	5531	1560	U I 38		IRISH, DIANA
09/28/2010	5178	1586	Q I	320,000	MAY LIVING TRUST
11/05/2005	4859	0049	U I 38		MAY

PICTURE

LISTING HISTORY

07/25/12	KCM
03/23/11	KCPU
05/08/03	BW X

NOTES

D-7435. CLAY. NOH EST BTH COUNT CHNG PER PERMIT 3/11KC, CORRECT STORY HEIGHT, & COND 7/12KC

EXTRA FEATURES VALUATION

Feature Type	Units	Lngth x Width	Size Adj	Rate	Cond	Market Value	Notes
FIREPLACE 1-1	1		100	3,000.00	100	3,000	
SHED-WOOD	96	8 x 12	227	10.00	90	1,961	
						5,000	

MUNICIPAL SOFTWARE BY AVITAR

KINGSTON ASSESSING OFFICE

PARCEL TOTAL TAXABLE VALUE

Year	Building	Features	Land
2014	$ 201,000	$ 5,000	$ 88,300
		Parcel Total:	$ 294,300
2015	$ 201,000	$ 5,000	$ 88,300
		Parcel Total:	$ 294,300
2016	**$ 201,000**	**$ 5,000**	**$ 88,300**
		Parcel Total:	**$ 294,300**

LAND VALUATION

Zone: SFRAG SFR AGR **Minimum Acreage:** 1.84 **Minimum Frontage:** 200 **Site:** **Driveway:** **Road:**

Land Type	Units	Base Rate	NC	Adj	Site	Road	DWay	Topography	Cond	Ad Valorem	SPI	R	Tax Value	Notes
1F RES	1.840 ac	80,000	F	110	100	100	100		100	88,000	0	N	88,000	
1F RES	0.160 ac	x 2,000	X	100					100	300	0	N	300	
	2.000 ac									88,300			**88,300**	

Map: 000R39 **Lot: 000051** **Sub: 000000** **Card: 1 of 1** **9 KING PINE WAY** **KINGSTON** **Printed: 01/29/2016**

PICTURE

OWNER

IRISH, DIANA L
DIANA L IRISH REV TRUST
9 KING PINE WAY

KINGSTON, NH 03848

TAXABLE DISTRICTS

District	Percentage

PERMITS

Date	Permit ID	Permit Type	Notes
10/19/10	R39-51	ALTERATION	USE EXISTING BEDROOM T
03/21/79	R39-51	NEW BUILDING	1.5 S, SINGLE FAMILY, 1.5 I
02/13/79	78840	SEPTIC	APPROVAL TO CONSTRUC

BUILDING DETAILS

Model: **2.00 STORY FRAME GARRISON**
Roof: **GABLE HIP/ASPHALT**
Ext: **VINYL SIDING**
Int: **DRYWALL**
Floor: **HARDWOOD/CARPET**
Heat: **OIL/HOT WATER**
Bedrooms: **4** Baths: **2.5** Fixtures:
Extra Kitchens: Fireplaces:
A/C: **No** Generators:
Quality: **A2 AVG+20**
Com. Wall:
Size Adj: **0.9360** Base Rate: **RSA 80.00**
Bldg. Rate: **1.0897**
Sq. Foot Cost: **$ 87.18**

BUILDING SUB AREA DETAILS

ID	Description	Area	Adj.	Effect.
ATU	ATTIC	1244	0.10	124
FFF	FST FLR FIN	1244	1.00	1244
BSG	BSMT GAR	484	0.25	121
UFF	UPPER FLR FIN	972	1.00	972
BMU	BSMNT	760	0.15	114
DEK	DECK/ENTRANCE	162	0.10	16
GLA:	**2,216**	**4,866**		**2,591**

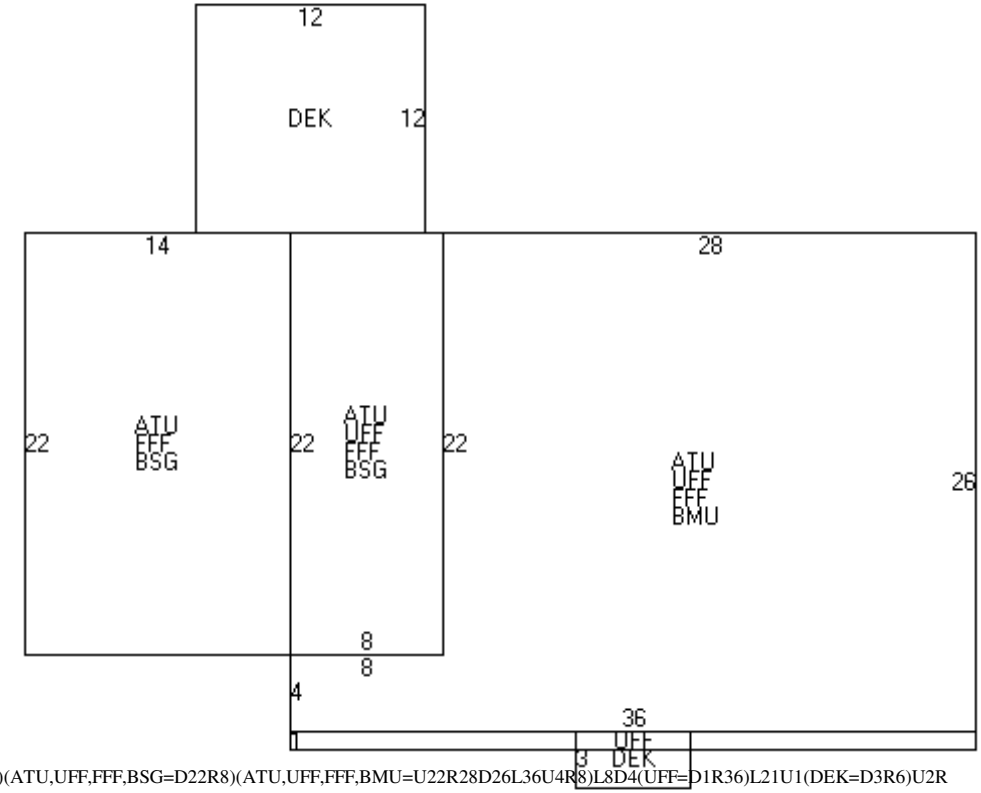

(ATU,FFF,BSG=U22R14)(ATU,UFF,FFF,BSG=D22R8)(ATU,UFF,FFF,BMU=U22R28D26L36U4R8)L8D4(UFF=D1R36)L21U1(DEK=D3R6)U2R15U27L29(DEK=U12L12)

2013 BASE YEAR BUILDING VALUATION

Market Cost New:		**$ 225,883**
Year Built:		**1980**
Condition For Age:	GOOD	**11 %**
Physical:		
Functional:		
Economic:		
Temporary:		
Total Depreciation:		**11 %**
Building Value:		**$ 201,000**

OWNER INFORMATION

WEEKS, LINDELL
WEEKS, LORETTA J.
7 KING PINE WAY

KINGSTON, NH 03848

SALES HISTORY

Date	Book	Page	Type	Price	Grantor
10/22/2013	5488	2775	Q I	395,000	SYMMONDS, MICHAEL H

PICTURE

LISTING HISTORY

03/18/15	KCPU	
02/20/13	KCPU	NV CHNG
07/29/12	KCML	CHNG BTH COUNT, ADD DE
05/08/03	BW O	LIST FOR REVAL

NOTES

D-7435. NATURAL WOOD & CREAM. ADJ SKETCH PER EST FINISHED AREA
CHK 2016 FOR COMP 3/15KC

EXTRA FEATURES VALUATION

Feature Type	Units	Lngth x Width	Size Adj	Rate	Cond	Market Value	Notes
FIREPLACE 1-1	1		100	3,000.00	100	3,000	
SHED-WOOD	144	12 x 12	171	10.00	100	2,462	
						5,500	

MUNICIPAL SOFTWARE BY AVITAR

KINGSTON ASSESSING OFFICE

PARCEL TOTAL TAXABLE VALUE

Year	Building	Features	Land
2014	$ 225,500	$ 5,500	$ 88,300
		Parcel Total:	$ 319,300
2015	$ 236,500	$ 5,500	$ 88,300
		Parcel Total:	$ 330,300
2016	**$ 236,500**	**$ 5,500**	**$ 88,300**
		Parcel Total:	**$ 330,300**

LAND VALUATION

Zone: SFRAG SFR AGR **Minimum Acreage:** 1.84 **Minimum Frontage:** 200 **Site:** **Driveway:** **Road:**

Land Type	Units	Base Rate	NC	Adj	Site	Road	DWay	Topography	Cond	Ad Valorem	SPI	R	Tax Value	Notes
1F RES	1.840 ac	80,000	F	110	100	100	100		100	88,000	0	N	88,000	
1F RES	0.160 ac	x 2,000	X	100					100	300	0	N	300	
	2.000 ac									88,300			**88,300**	

Map: 000R39 **Lot: 000052** **Sub: 000000** **Card: 1 of 1** **7 KING PINE WAY** **KINGSTON** **Printed: 01/29/2016**

PICTURE

OWNER

WEEKS, LINDELL
WEEKS, LORETTA J.
7 KING PINE WAY

KINGSTON, NH 03848

TAXABLE DISTRICTS

District	Percentage

PERMITS

Date	Permit ID	Permit Type	Notes
09/19/14	R39-52	PLUMBING PERMIT	PLUMB AREA OVER GARA
08/12/14	R39-52	ELECTRIC PERMIT	WIRE GENERATOR; WIRE F
08/10/12	R39-52	PLUMBING PERMIT	BATHROOM

BUILDING DETAILS

Model: **1.75 STORY FRAME CAPE**
Roof: **GABLE HIP/ASPHALT**
Ext: **CLAP BOARD/WOOD SHINGLE**
Int: **DRYWALL**
Floor: **LINOLEUM OR SIM/CARPET**
Heat: **OIL/HOT WATER**
Bedrooms: **4** Baths: **2.5** Fixtures:
Extra Kitchens: Fireplaces:
A/C: **Yes 25.00 %** Generators:
Quality: **A2 AVG+20**
Com. Wall:
Size Adj: **0.8984** Base Rate: **RSA 80.00**
Bldg. Rate: **1.0460**
Sq. Foot Cost: **$ 83.68**

BUILDING SUB AREA DETAILS

ID	Description	Area	Adj.	Effect.
TQF	3/4 STRY FIN	1790	0.75	1343
FFF	FST FLR FIN	1428	1.00	1428
BMU	BSMNT	1428	0.15	214
OPF	OPEN PORCH FIN	40	0.25	10
DEK	DECK/ENTRANCE	146	0.10	15
GAR	GARAGE	530	0.45	239
GLA:	**2,771**	**5,362**		**3,249**

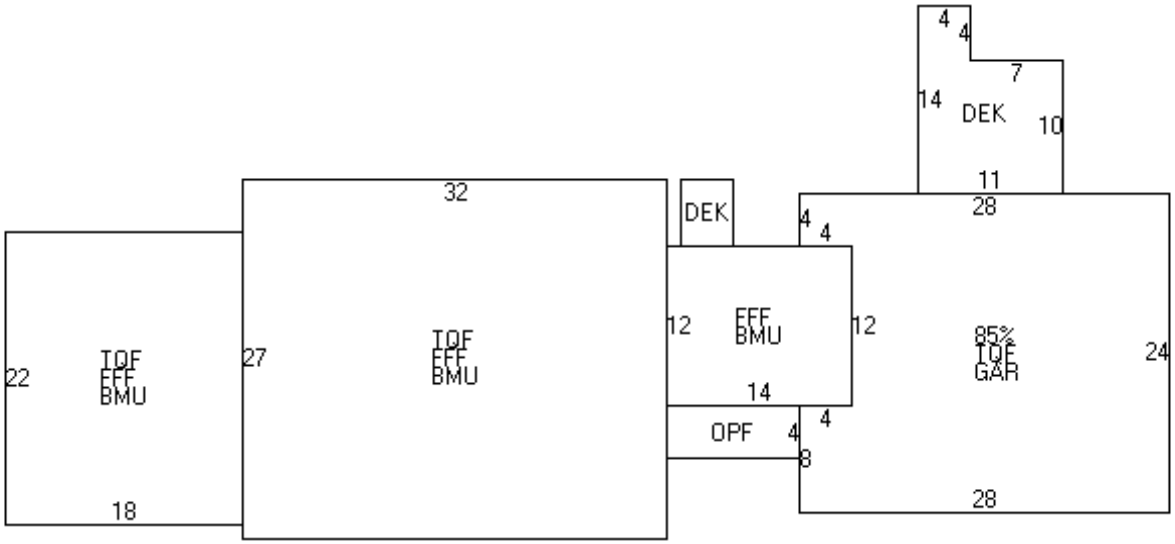

(TQF,FFF,BMU=D22R18)D1(TQF,FFF,BMU=U27R32)D5(FFF,BMU=D12R14)L4(OPF=D4L10)U16R1(DEK=U5R4)R5D5(85%TQF,GAR=U4R28D24L28U8R4U12L4)R20U4(DEK=U10L7U4L4D14R11)

2013 BASE YEAR BUILDING VALUATION

Market Cost New:		**$ 271,876**
Year Built:		**1984**
Condition For Age:	AVERAGE	**13 %**
Physical:		
Functional:		
Economic:		
Temporary:		
Total Depreciation:		**13 %**
Building Value:		**$ 236,500**