OWNER INFORMATION

CORSO, JUDITH
CORSO FAMILY REALTY TRUST
2 ASH DRIVE

KINGSTON, NH 03848-3350

SALES HISTORY

Date	Book	Page	Type	Price	Grantor
10/25/2013	5490	0250	U I 38		CORSO, JUDITH
04/11/2005	4463	861	Q I	249,933	RIVER VALLEY

PICTURE

LISTING HISTORY

01/13/14	KCM	
05/12/10	KCML	ADJ FFF BUMP OUT, STORY
04/05/04	SH O	
03/27/03	RW X	LIST FOR REVAL

NOTES

D-30670. TAN.

EXTRA FEATURES VALUATION

Feature Type	Units	Lngth x Width	Size Adj	Rate	Cond	Market Value	Notes
FIREPLACE GAS	1		100	2,500.00	100	2,500	
ASH DR, CONDOS	1		100	32,000.00	100	32,000	
						34,500	

MUNICIPAL SOFTWARE BY AVITAR

KINGSTON ASSESSING OFFICE

PARCEL TOTAL TAXABLE VALUE

Year	Building	Features	Land
2014	$ 134,200	$ 34,500	$ 0
		Parcel Total: $ 168,700	
2015	$ 134,200	$ 34,500	$ 0
		Parcel Total: $ 168,700	
2016	**$ 134,200**	**$ 34,500**	**$ 0**
		Parcel Total: $ 168,700	

LAND VALUATION

Zone: RRAQ RR W/AQUIFER **Minimum Acreage:** 3.00 **Minimum Frontage:** 200 **Site:** **Driveway:** **Road:**

Land Type	Units	Base Rate	NC	Adj	Site	Road	DWay	Topography	Cond	Ad Valorem	SPI	R	Tax Value	Notes
1F RES	0		E											
	0 ac													

Map: 000R16 **Lot: 000005** **Sub: 0005-1** **Card: 1 of 1** **2 ASH DR** **KINGSTON** **Printed: 08/02/2016**

PICTURE

OWNER

CORSO, JUDITH
CORSO FAMILY REALTY TRUST
2 ASH DRIVE

KINGSTON, NH 03848-3350

TAXABLE DISTRICTS

District	Percentage

PERMITS

Date	Permit ID	Permit Type	Notes
12/01/02	R16-5-5-1	BUILDING	CONDOMINIUM UNIT #1

BUILDING DETAILS

Model: **1.50 STORY FRAME CONDO**
Roof: **GABLE HIP/ASPHALT**
Ext: **VINYL SIDING**
Int: **DRYWALL**
Floor: **CARPET/LINOLEUM OR SIM**
Heat: **GAS/FA DUCTED**
Bedrooms: **1** Baths: **2.0** Fixtures:
Extra Kitchens: Fireplaces:
A/C: **Yes 100.00 %** Generators:
Quality: **A0 AVG**
Com. Wall:
Size Adj: **1.0265** Base Rate: **RCT 84.00**
Bldg. Rate: **0.9959**
Sq. Foot Cost: **$ 83.66**

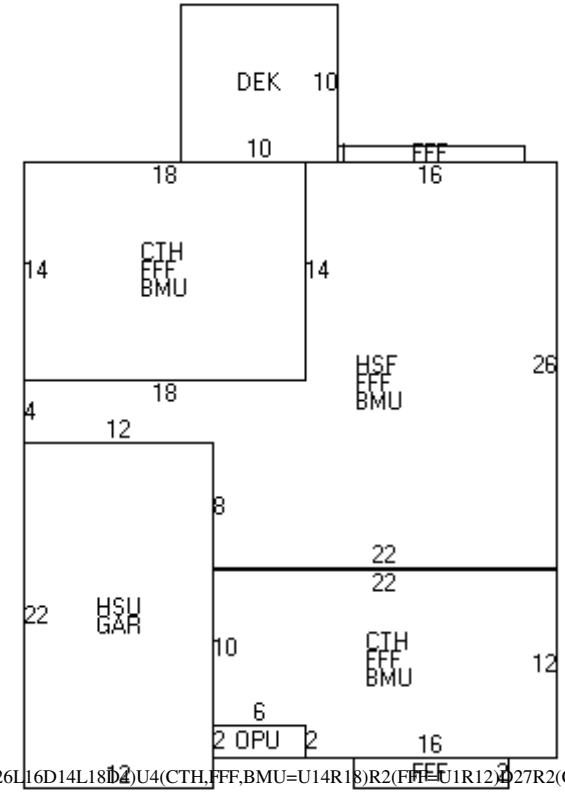

(HSU,GAR=L12U22)(HSF,FFF,BMU=R12D8R22U26L16D14L18D4)U4(CTH,FFF,BMU=U14R18)R2(FFF=U1R12)D27R2(CTH,FFF,BMU=D12L16IU2L6U10R22)D12L3(FFF=D2L10)U2L3(OPU=L6U2)U36L2(DEK=R10U10)

BUILDING SUB AREA DETAILS

ID	Description	Area	Adj.	Effect.
HSU	1/2 STRY UNFIN	264	0.25	66
GAR	GARAGE	264	0.45	119
HSF	1/2 STRY FIN	536	0.50	268
FFF	FST FLR FIN	1072	1.00	1072
BMU	BSMNT	1040	0.15	156
CTH	CATHEDRAL	504	0.10	50
OPU	OPEN PORCH	12	0.15	2
DEK	DECK/ENTRANCE	100	0.10	10
GLA:	**1,340**	**3,792**		**1,743**

2013 BASE YEAR BUILDING VALUATION

Market Cost New:		**$ 145,819**
Year Built:		**2003**
Condition For Age:	AVERAGE	**8 %**
Physical:		
Functional:		
Economic:		
Temporary:		
Total Depreciation:		**8 %**
Building Value:		**$ 134,200**

OWNER INFORMATION

GAGNE, BERITH L.

34 CEDAR CREST AVENUE

SALEM, MA 01970

SALES HISTORY

Date	Book	Page	Type	Price	Grantor
05/08/2009	5009	19	U I 38		BURRILL, CHARLES R., H
03/31/2004	4258	2734	Q I	209,900	RIVER VALLEY DEV.

PICTURE

LISTING HISTORY

01/13/14 KCM
05/12/10 KCML
04/05/04 SH X
03/27/03 RW X

NOTES

TAN, RECHECK 2004- FRAME ONLY. COMPLETE 2004. TRANSFER BY PROBATE 5/8/2009 - DOCKET #2008-0465., FPL=GAS, ADD BDRM, ADJ FFF BUMP OUT, STORY HEIGHT & LABELING 5/10KC

EXTRA FEATURES VALUATION

Feature Type	Units	Lngth x Width	Size Adj	Rate	Cond	Market Value	Notes
FIREPLACE GAS	1		100	2,500.00	100	2,500	
ASH DR, CONDOS	1		100	32,000.00	100	32,000	
						34,500	

MUNICIPAL SOFTWARE BY AVITAR

KINGSTON ASSESSING OFFICE

PARCEL TOTAL TAXABLE VALUE

Year	Building	Features	Land
2014	$ 135,500	$ 34,500	$ 0
		Parcel Total: $ 170,000	
2015	$ 135,500	$ 34,500	$ 0
		Parcel Total: $ 170,000	
2016	**$ 135,500**	**$ 34,500**	**$ 0**
		Parcel Total: $ 170,000	

LAND VALUATION

Zone: RRAQ RR W/AQUIFER **Minimum Acreage:** 3.00 **Minimum Frontage:** 200 **Site:** **Driveway:** **Road:**

Land Type	Units	Base Rate	NC	Adj	Site	Road	DWay	Topography	Cond	Ad Valorem	SPI	R	Tax Value	Notes
1F RES	0		E											
	0 ac													

PICTURE

OWNER

GAGNE, BERITH L.

34 CEDAR CREST AVENUE

SALEM, MA 01970

TAXABLE DISTRICTS

District	Percentage

PERMITS

Date	Permit ID	Permit Type	Notes
12/01/02	R16-5-5-2	BUILDING	CONDOMINIUM UNIT 2

BUILDING DETAILS

Model: **1.50 STORY FRAME CONDO**
Roof: **GABLE HIP/ASPHALT**
Ext: **VINYL SIDING**
Int: **DRYWALL**
Floor: **CARPET/LINOLEUM OR SIM**
Heat: **GAS/FA DUCTED**
Bedrooms: **2** Baths: **2.0** Fixtures:
Extra Kitchens: Fireplaces:
A/C: **Yes 100.00 %** Generators:
Quality: **A0 AVG**
Com. Wall:
Size Adj: **1.0265** Base Rate: **RCT 84.00**
Bldg. Rate: **1.0060**
Sq. Foot Cost: **$ 84.50**

BUILDING SUB AREA DETAILS

ID	Description	Area	Adj.	Effect.
HSU	1/2 STRY UNFIN	264	0.25	66
GAR	GARAGE	264	0.45	119
HSF	1/2 STRY FIN	536	0.50	268
FFF	FST FLR FIN	1072	1.00	1072
BMU	BSMNT	1040	0.15	156
CTH	CATHEDRAL	504	0.10	50
OPU	OPEN PORCH	12	0.15	2
DEK	DECK/ENTRANCE	100	0.10	10
GLA:	**1,340**	**3,792**		**1,743**

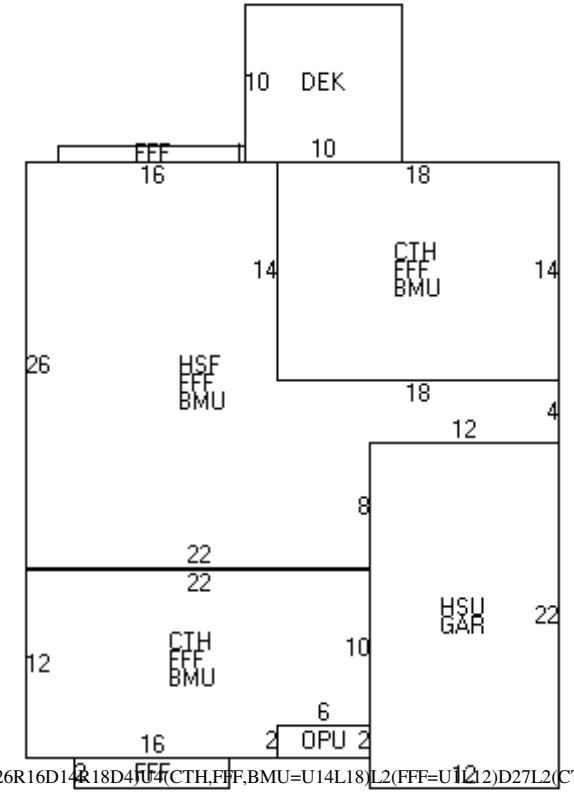

(HSU,GAR=R12U22)(HSF,FFF,BMU=L12D8L22U26R16D14R18D4U4(CTH,FFF,BMU=U14L18)L2(FFF=U12)D27L2(CTH,FFF,BMU=D12R16IU2R6U10L22)D12R3(FFF=D2R10)U2R3(OPU=R6U2)U36R2(DEK=L10U10)

2013 BASE YEAR BUILDING VALUATION

Market Cost New:		**$ 147,284**
Year Built:		**2003**
Condition For Age:	AVERAGE	**8 %**
Physical:		
Functional:		
Economic:		
Temporary:		
Total Depreciation:		**8 %**
Building Value:		**$ 135,500**

OWNER INFORMATION

DUPLESSIS, F. VINCENT
DUPLESSIS, DEBRA
6 ASH DRIVE

KINGSTON, NH 03848

SALES HISTORY

Date	Book	Page	Type	Price	Grantor
11/26/2003	4199	0221	Q I	210,000	RIVER VALLEY DEV.

PICTURE

LISTING HISTORY

01/13/14 KCM
05/12/10 KCML
04/05/04 SH X
03/27/03 RW X

NOTES

TAN, RECHECK 2004 FRAME ONLY. COMPLETE 2004. FPL=GAS, ADJ FFF MEAS, STORY HEIGHT & LABELING, 5/10KC

EXTRA FEATURES VALUATION

Feature Type	Units	Lngth x Width	Size Adj	Rate	Cond	Market Value	Notes
FIREPLACE GAS	1		100	2,500.00	100	2,500	
ASH DR, CONDOS	1		100	32,000.00	100	32,000	
						34,500	

MUNICIPAL SOFTWARE BY AVITAR

KINGSTON ASSESSING OFFICE

PARCEL TOTAL TAXABLE VALUE

Year	Building	Features	Land
2014	$ 134,200	$ 34,500	$ 0
		Parcel Total: $ 168,700	
2015	$ 134,200	$ 34,500	$ 0
		Parcel Total: $ 168,700	
2016	**$ 134,200**	**$ 34,500**	**$ 0**
		Parcel Total: $ 168,700	

LAND VALUATION

Zone: RRAQ RR W/AQUIFER **Minimum Acreage:** 3.00 **Minimum Frontage:** 200 **Site:** **Driveway:** **Road:**

Land Type	Units	Base Rate	NC	Adj	Site	Road	DWay	Topography	Cond	Ad Valorem	SPI	R	Tax Value	Notes
1F RES	0		E											
	0 ac													

PICTURE

OWNER

DUPLESSIS, F. VINCENT
DUPLESSIS, DEBRA
6 ASH DRIVE

KINGSTON, NH 03848

TAXABLE DISTRICTS

District	Percentage

PERMITS

Date	Permit ID	Permit Type	Notes
12/01/02	R16-5-5-3	BUILDING	CONDOMINIUM UNIT 3

BUILDING DETAILS

Model: **1.50 STORY FRAME CONDO**
Roof: **GABLE HIP/ASPHALT**
Ext: **VINYL SIDING**
Int: **DRYWALL**
Floor: **CARPET/LINOLEUM OR SIM**
Heat: **GAS/FA DUCTED**
Bedrooms: **1** Baths: **2.0** Fixtures:
Extra Kitchens: Fireplaces:
A/C: **Yes 100.00 %** Generators:
Quality: **A0 AVG**
Com. Wall:
Size Adj: **1.0265** Base Rate: **RCT 84.00**
Bldg. Rate: **0.9959**
Sq. Foot Cost: **$ 83.66**

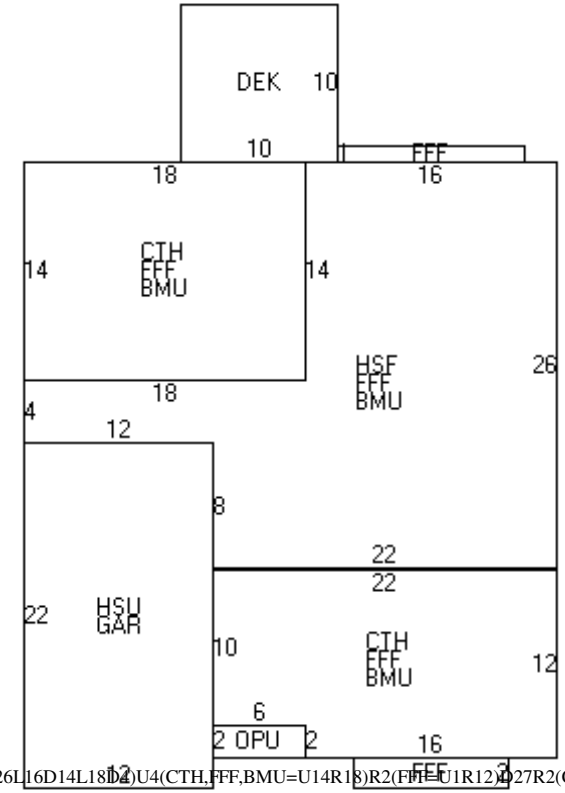

(HSU,GAR=L12U22)(HSF,FFF,BMU=R12D8R22U26L16D14L18D4)U4(CTH,FFF,BMU=U14R18)R2(FFF=U1R12)D27R2(CTH,FFF,BMU=D12L16IU2L6U10R22)D12L3(FFF=D2L10)U2L3(OPU=L6U2)U36L2(DEK=R10U10)

BUILDING SUB AREA DETAILS

ID	Description	Area	Adj.	Effect.
HSU	1/2 STRY UNFIN	264	0.25	66
GAR	GARAGE	264	0.45	119
HSF	1/2 STRY FIN	536	0.50	268
FFF	FST FLR FIN	1072	1.00	1072
BMU	BSMNT	1040	0.15	156
CTH	CATHEDRAL	504	0.10	50
OPU	OPEN PORCH	12	0.15	2
DEK	DECK/ENTRANCE	100	0.10	10
GLA:	**1,340**	**3,792**		**1,743**

2013 BASE YEAR BUILDING VALUATION

Market Cost New:		**$ 145,819**
Year Built:		**2003**
Condition For Age:	AVERAGE	**8 %**
Physical:		
Functional:		
Economic:		
Temporary:		
Total Depreciation:		**8 %**
Building Value:		**$ 134,200**

OWNER INFORMATION

MOORE, JACQUELINE
AMNOTT, C & G & N TONGUE
8 ASH DRIVE

KINGSTON, NH 03848

SALES HISTORY

Date	Book	Page	Type	Price	Grantor
11/17/2014	5575	1946	U I 38		MOORE, JACQUELINE
11/03/2003	4185	2840	Q I	219,900	RIVER VALLEY DEV.

PICTURE

LISTING HISTORY

01/13/14 KCM
05/12/10 KCM
04/05/04 SH X
03/27/03 RW X

NOTES

TAN,

EXTRA FEATURES VALUATION

Feature Type	Units	Lngth x Width	Size Adj	Rate	Cond	Market Value	Notes
FIREPLACE GAS	1		100	2,500.00	100	2,500	
ASH DR, CONDOS	1		100	32,000.00	100	32,000	
						34,500	

MUNICIPAL SOFTWARE BY AVITAR.

KINGSTON ASSESSING OFFICE

PARCEL TOTAL TAXABLE VALUE

Year	Building	Features	Land
2014	$ 134,200	$ 34,500	$ 0
		Parcel Total: $ 168,700	
2015	$ 134,200	$ 34,500	$ 0
		Parcel Total: $ 168,700	
2016	**$ 134,200**	**$ 34,500**	**$ 0**
		Parcel Total: $ 168,700	

LAND VALUATION

Zone: RRAQ RR W/AQUIFER **Minimum Acreage:** 3.00 **Minimum Frontage:** 200 **Site:** **Driveway:** **Road:**

Land Type	Units	Base Rate	NC	Adj	Site	Road	DWay	Topography	Cond	Ad Valorem	SPI	R	Tax Value	Notes
1F RES	0		E											
	0 ac													

Map: 000R16 **Lot: 000005** **Sub: 0005-4** **Card: 1 of 1** **8 ASH DR** **KINGSTON** **Printed: 08/02/2016**

PICTURE

OWNER

MOORE, JACQUELINE
AMNOTT, C & G & N TONGUE
8 ASH DRIVE

KINGSTON, NH 03848

TAXABLE DISTRICTS

District	Percentage

PERMITS

Date	Permit ID	Permit Type	Notes
12/01/02	R16-5-5-4	BUILDING	CONDOMINIUM UNIT 4

BUILDING DETAILS

Model: **1.50 STORY FRAME CONDO**
Roof: **GABLE HIP/ASPHALT**
Ext: **VINYL SIDING**
Int: **DRYWALL**
Floor: **CARPET/LINOLEUM OR SIM**
Heat: **GAS/FA DUCTED**
Bedrooms: **1** Baths: **2.0** Fixtures:
Extra Kitchens: Fireplaces:
A/C: **Yes 100.00 %** Generators:
Quality: **A0 AVG**
Com. Wall:
Size Adj: **1.0265** Base Rate: **RCT 84.00**
Bldg. Rate: **0.9959**
Sq. Foot Cost: **$ 83.66**

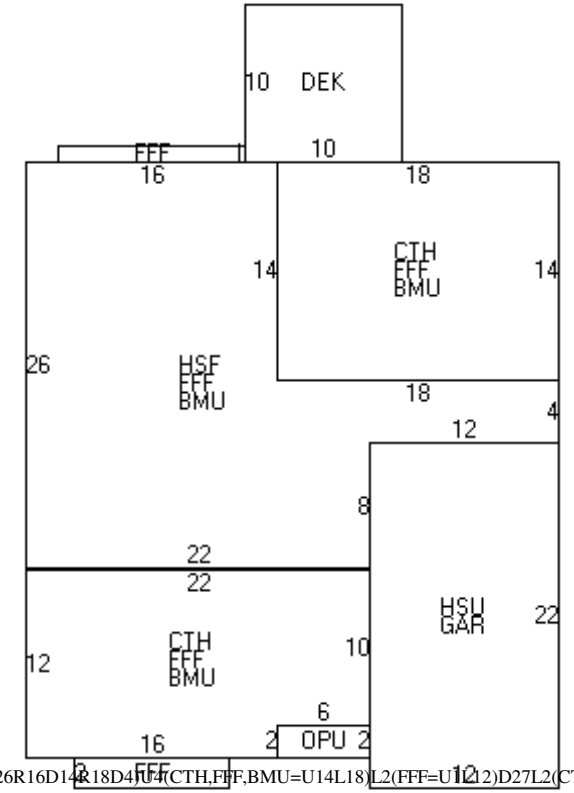

(HSU,GAR=R12U22)(HSF,FFF,BMU=L12D8L22U26R16D14R18D4U4(CTH,FFF,BMU=U14L18)L2(FFF=U12)D27L2(CTH,FFF,BMU=D12R16IU2R6U10L22)D12R3(FFF=D2R10)U2R3(OPU=R6U2)U36R2(DEK=L10U10)

BUILDING SUB AREA DETAILS

ID	Description	Area	Adj.	Effect.
HSU	1/2 STRY UNFIN	264	0.25	66
GAR	GARAGE	264	0.45	119
HSF	1/2 STRY FIN	536	0.50	268
FFF	FST FLR FIN	1072	1.00	1072
BMU	BSMNT	1040	0.15	156
CTH	CATHEDRAL	504	0.10	50
OPU	OPEN PORCH	12	0.15	2
DEK	DECK/ENTRANCE	100	0.10	10
GLA:	**1,340**	**3,792**		**1,743**

2013 BASE YEAR BUILDING VALUATION

Market Cost New:		**$ 145,819**
Year Built:		**2003**
Condition For Age:	AVERAGE	**8 %**
Physical:		
Functional:		
Economic:		
Temporary:		
Total Depreciation:		**8 %**
Building Value:		**$ 134,200**

OWNER INFORMATION

FOLEY, GREGORY

10 ASH DRIVE

KINGSTON, NH 03848

SALES HISTORY

Date	Book	Page	Type	Price	Grantor
08/27/2010	5138	1762	Q I	182,533	SORBER, KEVIN KENNETH
08/06/2007	4830	1191	Q I	233,000	CURTIN
10/16/2003	4174	187	Q I	229,930	RIVER VALLEY

PICTURE

LISTING HISTORY

01/13/14	KCM	
05/12/10	KCM	
03/24/06	JARX	
04/06/04	SH X	100% COMPLETE

NOTES

D-30670. TAN.

EXTRA FEATURES VALUATION

Feature Type	Units	Lngth x Width	Size Adj	Rate	Cond	Market Value	Notes
FIREPLACE GAS	1		100	2,500.00	100	2,500	
ASH DR, CONDOS	1		100	32,000.00	100	32,000	
						34,500	

MUNICIPAL SOFTWARE BY AVITAR

KINGSTON ASSESSING OFFICE

PARCEL TOTAL TAXABLE VALUE

Year	Building	Features	Land
2014	$ 133,600	$ 34,500	$ 0
		Parcel Total: $ 168,100	
2015	$ 133,600	$ 34,500	$ 0
		Parcel Total: $ 168,100	
2016	**$ 133,600**	**$ 34,500**	**$ 0**
		Parcel Total: $ 168,100	

LAND VALUATION

Zone: RRAQ RR W/AQUIFER **Minimum Acreage:** 3.00 **Minimum Frontage:** 200 **Site:** **Driveway:** **Road:**

Land Type	Units	Base Rate	NC	Adj	Site	Road	DWay	Topography	Cond	Ad Valorem	SPI	R	Tax Value	Notes
1F RES	0		E											
	0 ac													

PICTURE

OWNER

FOLEY, GREGORY

10 ASH DRIVE

KINGSTON, NH 03848

TAXABLE DISTRICTS

District	Percentage

PERMITS

Date	Permit ID	Permit Type	Notes
03/25/03	R16-5-5-5	BUILDING	NEW CONDO UNIT#5 - 10 A

BUILDING DETAILS

Model: **1.50 STORY FRAME CONDO**
Roof: **GABLE HIP/ASPHALT**
Ext: **VINYL SIDING**
Int: **DRYWALL**
Floor: **CARPET/LINOLEUM OR SIM**
Heat: **GAS/FA DUCTED**
Bedrooms: **1** Baths: **2.0** Fixtures:
Extra Kitchens: Fireplaces:
A/C: **Yes 100.00 %** Generators:
Quality: **A0 AVG**
Com. Wall:
Size Adj: **1.0281** Base Rate: **RCT 84.00**
Bldg. Rate: **0.9975**
Sq. Foot Cost: **$ 83.79**

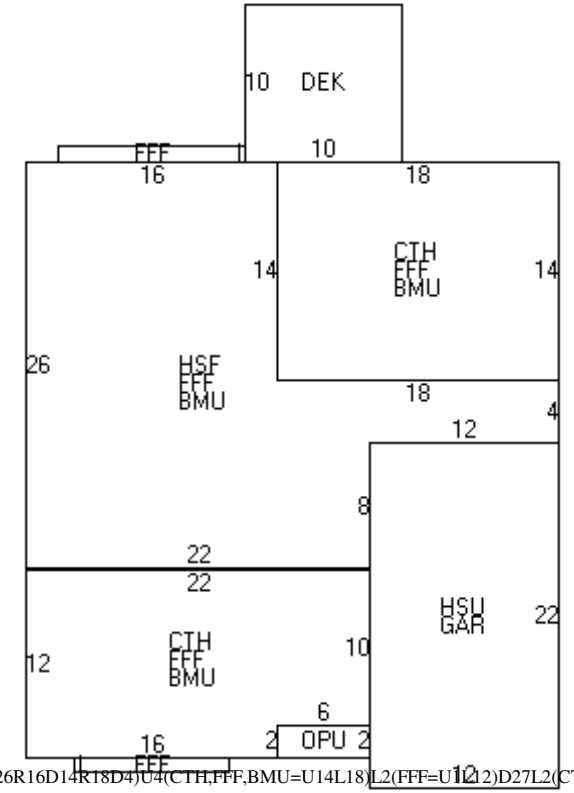

(HSU,GAR=R12U22)(HSF,FFF,BMU=L12D8L22U26R16D14R18D4)U4(CTH,FFF,BMU=U14L18)L2(FFF=U12)D27L2(CTH,FFF,BMU=D12R16IU2R6U10L22)D12R3(FFF=D1R10)U1R3(OPU=R6U2)U36R2(DEK=L10U10)

BUILDING SUB AREA DETAILS

ID	Description	Area	Adj.	Effect.
HSU	1/2 STRY UNFIN	264	0.25	66
GAR	GARAGE	264	0.45	119
HSF	1/2 STRY FIN	536	0.50	268
FFF	FST FLR FIN	1062	1.00	1062
BMU	BSMNT	1040	0.15	156
CTH	CATHEDRAL	504	0.10	50
OPU	OPEN PORCH	12	0.15	2
DEK	DECK/ENTRANCE	100	0.10	10
GLA:	**1,330**	**3,782**		**1,733**

2013 BASE YEAR BUILDING VALUATION

Market Cost New:		**$ 145,208**
Year Built:		**2004**
Condition For Age:	AVERAGE	**8 %**
Physical:		
Functional:		
Economic:		
Temporary:		
Total Depreciation:		**8 %**
Building Value:		**$ 133,600**

OWNER INFORMATION

SMITH, MICHELLE D

12 ASH DRIVE

KINGSTON, NH 03848

SALES HISTORY

Date	Book	Page	Type	Price	Grantor
09/30/2013	5483	0699	U I 38		SMITH, JAMES G.
04/20/2011	5209	1930	Q I	180,000	BOUDREAU, JOHN P.
02/28/2008	4891	0268	Q I	205,000	WEAGLE
10/01/2003	4164	1958	Q I	229,930	RIVER VALLEY

PICTURE

LISTING HISTORY

01/13/14	KCM	
04/23/13	KC M	
05/12/10	KCM	CYCLICAL
04/05/04	SH X	COMPLETE

NOTES

D-30670. TAN.

EXTRA FEATURES VALUATION

Feature Type	Units	Lngth x Width	Size Adj	Rate	Cond	Market Value	Notes
FIREPLACE GAS	1		100	2,500.00	100	2,500	
ASH DR, CONDOS	1		100	32,000.00	100	32,000	
						34,500	

MUNICIPAL SOFTWARE BY AVITAR

KINGSTON ASSESSING OFFICE

PARCEL TOTAL TAXABLE VALUE

Year	Building	Features	Land
2014	$ 133,600	$ 34,500	$ 0
		Parcel Total: $ 168,100	
2015	$ 133,600	$ 34,500	$ 0
		Parcel Total: $ 168,100	
2016	**$ 133,600**	**$ 34,500**	**$ 0**
		Parcel Total: $ 168,100	

LAND VALUATION

Zone: RRAQ RR W/AQUIFER **Minimum Acreage:** 3.00 **Minimum Frontage:** 200 **Site:** **Driveway:** **Road:**

Land Type	Units	Base Rate	NC	Adj	Site	Road	DWay	Topography	Cond	Ad Valorem	SPI	R	Tax Value	Notes
1F RES	0		E											
	0 ac													

PICTURE

OWNER

SMITH, MICHELLE D

12 ASH DRIVE

KINGSTON, NH 03848

TAXABLE DISTRICTS

District	Percentage

PERMITS

Date	Permit ID	Permit Type	Notes
09/30/03	R16-5-5-6	OCCUPANCY PERMIT	1 BR OCCUPANCY
03/25/03	R16-5-5-6	BUILDING	NEW CONDO UNIT #6 - 12 A

BUILDING DETAILS

Model: **1.50 STORY FRAME CONDO**
Roof: **GABLE HIP/ASPHALT**
Ext: **VINYL SIDING**
Int: **DRYWALL**
Floor: **CARPET/LINOLEUM OR SIM**
Heat: **GAS/FA DUCTED**
Bedrooms: **1** Baths: **2.0** Fixtures:
Extra Kitchens: Fireplaces:
A/C: **Yes 100.00 %** Generators:
Quality: **A0 AVG**
Com. Wall:
Size Adj: **1.0281** Base Rate: **RCT 84.00**
Bldg. Rate: **0.9975**
Sq. Foot Cost: **$ 83.79**

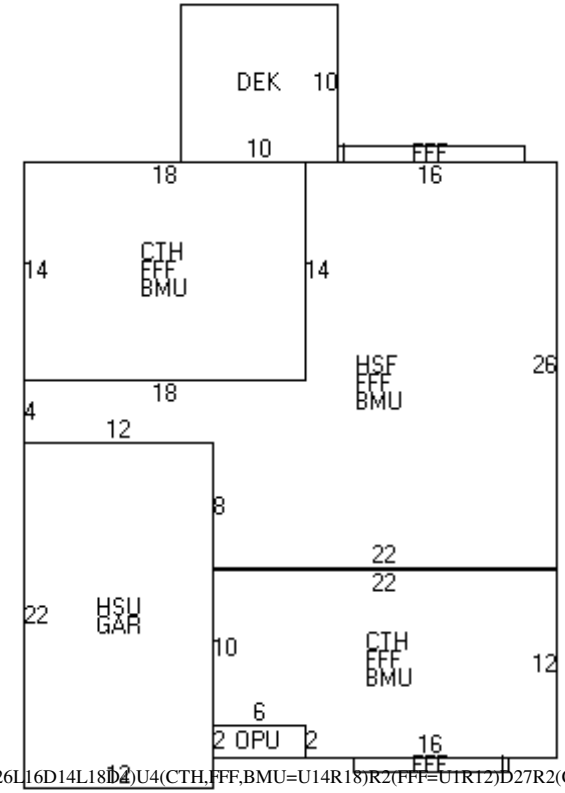

(HSU,GAR=L12U22)(HSF,FFF,BMU=R12D8R22U26L16D14L18D4)U4(CTH,FFF,BMU=U14R18)R2(FFF=U1R12)D27R2(CTH,FFF,BMU=D12L16IU2L6U10R22)D12L3(FFF=D1L10)U1L3(OPU=L6U2)U36L2(DEK=R10U10)

BUILDING SUB AREA DETAILS

ID	Description	Area	Adj.	Effect.
HSU	1/2 STRY UNFIN	264	0.25	66
GAR	GARAGE	264	0.45	119
HSF	1/2 STRY FIN	536	0.50	268
FFF	FST FLR FIN	1062	1.00	1062
BMU	BSMNT	1040	0.15	156
CTH	CATHEDRAL	504	0.10	50
OPU	OPEN PORCH	12	0.15	2
DEK	DECK/ENTRANCE	100	0.10	10
GLA:	**1,330**	**3,782**		**1,733**

2013 BASE YEAR BUILDING VALUATION

Market Cost New:		**$ 145,208**
Year Built:		**2004**
Condition For Age:	AVERAGE	**8 %**
Physical:		
Functional:		
Economic:		
Temporary:		
Total Depreciation:		**8 %**
Building Value:		**$ 133,600**

OWNER INFORMATION

BELLETETE, MARGARET

24 ASH DRIVE

KINGSTON, NH 03848-3350

SALES HISTORY

Date	Book	Page	Type	Price	Grantor
05/18/2004	4293	2401	Q I	229,900	RIVER VALLEY

PICTURE

LISTING HISTORY

01/13/14 KCM
05/13/10 KCM
04/06/04 SH X

NOTES

TAN COMPLETE 2004.

EXTRA FEATURES VALUATION

Feature Type	Units	Lngth x Width	Size Adj	Rate	Cond	Market Value	Notes
FIREPLACE GAS	1		100	2,500.00	100	2,500	
ASH DR, CONDOS	1		100	32,000.00	100	32,000	
						34,500	

MUNICIPAL SOFTWARE BY AVITAR

KINGSTON ASSESSING OFFICE

PARCEL TOTAL TAXABLE VALUE

Year	Building	Features	Land
2014	$ 133,600	$ 34,500	$ 0
		Parcel Total: $ 168,100	
2015	$ 133,600	$ 34,500	$ 0
		Parcel Total: $ 168,100	
2016	**$ 133,600**	**$ 34,500**	**$ 0**
		Parcel Total: $ 168,100	

LAND VALUATION

Zone: RRAQ RR W/AQUIFER **Minimum Acreage:** 3.00 **Minimum Frontage:** 200 **Site:** **Driveway:** **Road:**

Land Type	Units	Base Rate	NC	Adj	Site	Road	DWay	Topography	Cond	Ad Valorem	SPI	R	Tax Value	Notes
1F RES	0		E											
	0 ac													

Map: 000R16 **Lot: 000005** **Sub: 0005-7** **Card: 1 of 1** **24 ASH DR** **KINGSTON** **Printed: 08/02/2016**

PICTURE

OWNER

BELLETETE, MARGARET

24 ASH DRIVE

KINGSTON, NH 03848-3350

TAXABLE DISTRICTS

District	Percentage

PERMITS

Date	Permit ID	Permit Type	Notes
08/19/03	R16-5-5-7	NEW BUILDING	CONDOMINIUM UNIT #7

BUILDING DETAILS

Model: **1.50 STORY FRAME CONDO**
Roof: **GABLE HIP/ASPHALT**
Ext: **VINYL SIDING**
Int: **DRYWALL**
Floor: **CARPET/LINOLEUM OR SIM**
Heat: **GAS/FA DUCTED**
Bedrooms: **1** Baths: **2.0** Fixtures:
Extra Kitchens: Fireplaces:
A/C: **Yes 100.00 %** Generators:
Quality: **A0 AVG**
Com. Wall:
Size Adj: **1.0281** Base Rate: **RCT 84.00**
Bldg. Rate: **0.9975**
Sq. Foot Cost: **$ 83.79**

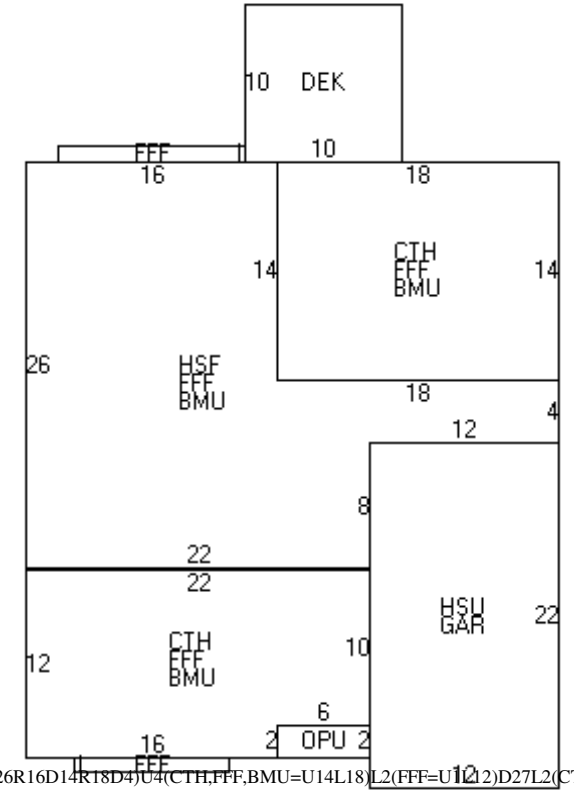

(HSU,GAR=R12U22)(HSF,FFF,BMU=L12D8L22U26R16D14R18D4)U4(CTH,FFF,BMU=U14L18)L2(FFF=U12)D27L2(CTH,FFF,BMU=D12R16IU2R6U10L22)D12R3(FFF=D1R10)U1R3(OPU=R6U2)U36R2(DEK=L10U10)

BUILDING SUB AREA DETAILS

ID	Description	Area	Adj.	Effect.
HSU	1/2 STRY UNFIN	264	0.25	66
GAR	GARAGE	264	0.45	119
HSF	1/2 STRY FIN	536	0.50	268
FFF	FST FLR FIN	1062	1.00	1062
BMU	BSMNT	1040	0.15	156
CTH	CATHEDRAL	504	0.10	50
OPU	OPEN PORCH	12	0.15	2
DEK	DECK/ENTRANCE	100	0.10	10
GLA:	**1,330**	**3,782**		**1,733**

2013 BASE YEAR BUILDING VALUATION

Market Cost New:		**$ 145,208**
Year Built:		**2004**
Condition For Age:	AVERAGE	**8 %**
Physical:		
Functional:		
Economic:		
Temporary:		
Total Depreciation:		**8 %**
Building Value:		**$ 133,600**

OWNER INFORMATION

PEABODY, SANDRA
323 MAINT ST. REALTY TRUST
26 ASH DRIVE

KINGSTON, NH 03848

SALES HISTORY

Date	Book	Page	Type	Price	Grantor
05/05/2014	5528	1993	U I 81	185,000	MORO, LINDA, TRUSTEE
08/05/2013	5467	1486	U I 38		MORO, LINDA
09/16/2005	4548	2559	Q I	264,900	SCHREMPF
02/20/2004	4237	0875	Q I	220,000	RIVER VALLEY DEV.

PICTURE

LISTING HISTORY

01/13/14 KCM
05/13/10 KCML
04/06/04 SH X

NOTES

COMPLETE 2004.

EXTRA FEATURES VALUATION

Feature Type	Units	Lngth x Width	Size Adj	Rate	Cond	Market Value	Notes
FIREPLACE GAS	1		100	2,500.00	100	2,500	
ASH DR, CONDOS	1		100	32,000.00	100	32,000	
						34,500	

MUNICIPAL SOFTWARE BY AVITAR

KINGSTON ASSESSING OFFICE

PARCEL TOTAL TAXABLE VALUE

Year	Building	Features	Land
2014	$ 133,600	$ 34,500	$ 0
		Parcel Total: $ 168,100	
2015	$ 133,600	$ 34,500	$ 0
		Parcel Total: $ 168,100	
2016	**$ 133,600**	**$ 34,500**	**$ 0**
		Parcel Total: $ 168,100	

LAND VALUATION

Zone: RRAQ RR W/AQUIFER **Minimum Acreage:** 3.00 **Minimum Frontage:** 200 **Site:** **Driveway:** **Road:**

Land Type	Units	Base Rate	NC	Adj	Site	Road	DWay	Topography	Cond	Ad Valorem	SPI	R	Tax Value	Notes
1F RES	0		E											
	0 ac													

PICTURE

OWNER

PEABODY, SANDRA
323 MAINT ST. REALTY TRUST
26 ASH DRIVE

KINGSTON, NH 03848

TAXABLE DISTRICTS

District	Percentage

PERMITS

Date	Permit ID	Permit Type	Notes
08/01/03	R16-5-5-8	BUILDING	CONDOMINIUM UNIT #8

BUILDING DETAILS

Model: **1.50 STORY FRAME CONDO**
Roof: **GABLE HIP/ASPHALT**
Ext: **VINYL SIDING**
Int: **DRYWALL**
Floor: **CARPET/LINOLEUM OR SIM**
Heat: **GAS/FA DUCTED**
Bedrooms: **1** Baths: **2.0** Fixtures:
Extra Kitchens: Fireplaces:
A/C: **Yes 100.00 %** Generators:
Quality: **A0 AVG**
Com. Wall:
Size Adj: **1.0281** Base Rate: **RCT 84.00**
Bldg. Rate: **0.9975**
Sq. Foot Cost: **$ 83.79**

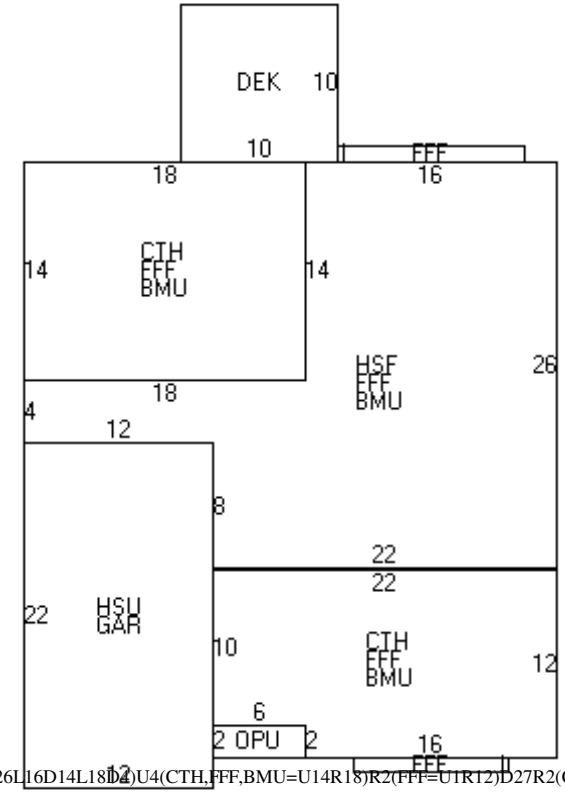

(HSU,GAR=L12U22)(HSF,FFF,BMU=R12D8R22U26L16D14L18D4)U4(CTH,FFF,BMU=U14R18)R2(FFF=U1R12)D27R2(CTH,FFF,BMU=D12L16IU2L6U10R22)D12L3(FFF=D1L10)U1L3(OPU=L6U2)U36L2(DEK=R10U10)

BUILDING SUB AREA DETAILS

ID	Description	Area	Adj.	Effect.
HSU	1/2 STRY UNFIN	264	0.25	66
GAR	GARAGE	264	0.45	119
HSF	1/2 STRY FIN	536	0.50	268
FFF	FST FLR FIN	1062	1.00	1062
BMU	BSMNT	1040	0.15	156
CTH	CATHEDRAL	504	0.10	50
OPU	OPEN PORCH	12	0.15	2
DEK	DECK/ENTRANCE	100	0.10	10
GLA:	**1,330**	**3,782**		**1,733**

2013 BASE YEAR BUILDING VALUATION

Market Cost New:		**$ 145,208**
Year Built:		**2004**
Condition For Age:	AVERAGE	**8 %**
Physical:		
Functional:		
Economic:		
Temporary:		
Total Depreciation:		**8 %**
Building Value:		**$ 133,600**

OWNER INFORMATION

LINDSEY, GLORIA P.

14 ASH DRIVE

KINGSTON, NH 03848-3350

SALES HISTORY

Date	Book	Page	Type	Price	Grantor
12/18/2003	4209	2727	Q I	229,900	RIVER VALLEY DEV.

PICTURE

LISTING HISTORY

01/13/14 KCM
02/20/13 KCPU
05/12/10 KCM
04/06/04 SH X

NOTES

TAN, NVCHNG 2/13KC

EXTRA FEATURES VALUATION

Feature Type	Units	Lngth x Width	Size Adj	Rate	Cond	Market Value	Notes
FIREPLACE GAS	1		100	2,500.00	100	2,500	
ASH DR, CONDOS	1		100	32,000.00	100	32,000	
						34,500	

MUNICIPAL SOFTWARE BY AVITAR

KINGSTON ASSESSING OFFICE

PARCEL TOTAL TAXABLE VALUE

Year	Building	Features	Land
2014	$ 133,600	$ 34,500	$ 0
		Parcel Total: $ 168,100	
2015	$ 133,600	$ 34,500	$ 0
		Parcel Total: $ 168,100	
2016	**$ 133,600**	**$ 34,500**	**$ 0**
		Parcel Total: $ 168,100	

LAND VALUATION

Zone: RRAQ RR W/AQUIFER **Minimum Acreage:** 3.00 **Minimum Frontage:** 200 **Site:** **Driveway:** **Road:**

Land Type	Units	Base Rate	NC	Adj	Site	Road	DWay	Topography	Cond	Ad Valorem	SPI	R	Tax Value	Notes
1F RES	0		E											
	0 ac													

Map: 000R16 **Lot: 000005** **Sub: 0005-9** **Card: 1 of 1** **14 ASH DR** **KINGSTON** **Printed: 08/02/2016**

PICTURE

OWNER

LINDSEY, GLORIA P.

14 ASH DRIVE

KINGSTON, NH 03848-3350

TAXABLE DISTRICTS

District	Percentage

PERMITS

Date	Permit ID	Permit Type	Notes
11/29/12	R16-5-5-9	ELECTRIC PERMIT	GENERATOR
07/03/03	R16-5-5-9	BUILDING	NEW CONDO UNIT

BUILDING DETAILS

Model: **1.50 STORY FRAME CONDO**
Roof: **GABLE HIP/ASPHALT**
Ext: **VINYL SIDING**
Int: **DRYWALL**
Floor: **CARPET/LINOLEUM OR SIM**
Heat: **GAS/FA DUCTED**
Bedrooms: **1** Baths: **2.0** Fixtures:
Extra Kitchens: Fireplaces:
A/C: **Yes 100.00 %** Generators:
Quality: **A0 AVG**
Com. Wall:
Size Adj: **1.0281** Base Rate: **RCT 84.00**
Bldg. Rate: **0.9975**
Sq. Foot Cost: **$ 83.79**

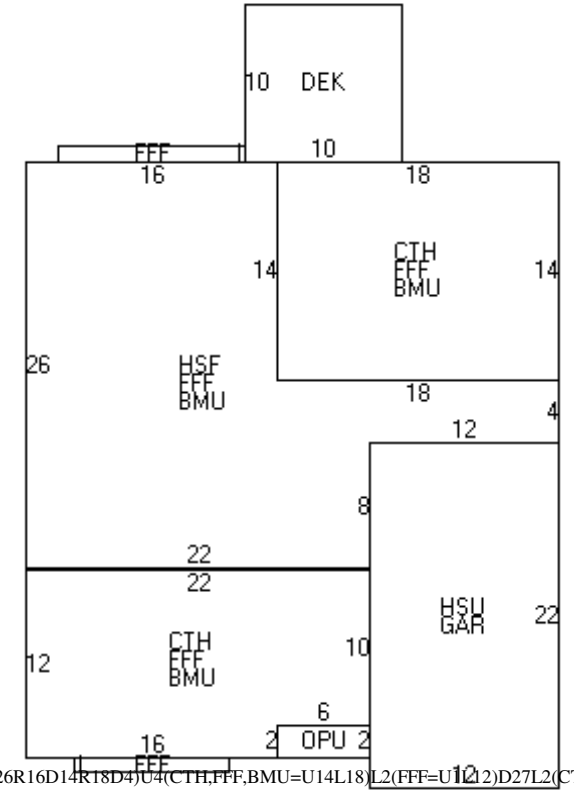

(HSU,GAR=R12U22)(HSF,FFF,BMU=L12D8L22U26R16D14R18D4)U4(CTH,FFF,BMU=U14L18)L2(FFF=U12)D27L2(CTH,FFF,BMU=D12R16IU2R6U10L22)D12R3(FFF=D1R10)U1R3(OPU=R6U2)U36R2(DEK=L10U10)

BUILDING SUB AREA DETAILS

ID	Description	Area	Adj.	Effect.
HSU	1/2 STRY UNFIN	264	0.25	66
GAR	GARAGE	264	0.45	119
HSF	1/2 STRY FIN	536	0.50	268
FFF	FST FLR FIN	1062	1.00	1062
BMU	BSMNT	1040	0.15	156
CTH	CATHEDRAL	504	0.10	50
OPU	OPEN PORCH	12	0.15	2
DEK	DECK/ENTRANCE	100	0.10	10
GLA:	**1,330**	**3,782**		**1,733**

2013 BASE YEAR BUILDING VALUATION

Market Cost New:		**$ 145,208**
Year Built:		**2004**
Condition For Age:	AVERAGE	**8 %**
Physical:		
Functional:		
Economic:		
Temporary:		
Total Depreciation:		**8 %**
Building Value:		**$ 133,600**

OWNER INFORMATION

DIONNE, MARIANNE

16 ASH DRIVE

KINGSTON, NH 03848

SALES HISTORY

Date	Book	Page	Type	Price	Grantor
01/12/2004	4219	2567	Q I	229,900	RIVER VALLEY DEV.

PICTURE

LISTING HISTORY

01/13/14 KCM
05/12/10 KCM
04/06/04 SH X

NOTES

TAN

EXTRA FEATURES VALUATION

Feature Type	Units	Lngth x Width	Size Adj	Rate	Cond	Market Value	Notes
FIREPLACE GAS	1		100	2,500.00	100	2,500	
ASH DR, CONDOS	1		100	32,000.00	100	32,000	
						34,500	

MUNICIPAL SOFTWARE BY AVITAR

KINGSTON ASSESSING OFFICE

PARCEL TOTAL TAXABLE VALUE

Year	Building	Features	Land
2014	$ 133,600	$ 34,500	$ 0
		Parcel Total: $ 168,100	
2015	$ 133,600	$ 34,500	$ 0
		Parcel Total: $ 168,100	
2016	**$ 133,600**	**$ 34,500**	**$ 0**
		Parcel Total: $ 168,100	

LAND VALUATION

Zone: RRAQ RR W/AQUIFER **Minimum Acreage:** 3.00 **Minimum Frontage:** 200 **Site:** **Driveway:** **Road:**

Land Type	Units	Base Rate	NC	Adj	Site	Road	DWay	Topography	Cond	Ad Valorem	SPI	R	Tax Value	Notes
1F RES	0		E											
	0 ac													

PICTURE

OWNER

DIONNE, MARIANNE

16 ASH DRIVE

KINGSTON, NH 03848

TAXABLE DISTRICTS

District	Percentage

PERMITS

Date	Permit ID	Permit Type	Notes
07/03/03	R16-5-5-10	NEW BUILDING	NEW CONDOMINIUM UNIT

BUILDING DETAILS

Model: **1.50 STORY FRAME CONDO**
Roof: **GABLE HIP/ASPHALT**
Ext: **VINYL SIDING**
Int: **DRYWALL**
Floor: **CARPET/LINOLEUM OR SIM**
Heat: **GAS/FA DUCTED**
Bedrooms: **1** Baths: **2.0** Fixtures:
Extra Kitchens: Fireplaces:
A/C: **Yes 100.00 %** Generators:
Quality: **A0 AVG**
Com. Wall:
Size Adj: **1.0281** Base Rate: **RCT 84.00**
Bldg. Rate: **0.9975**
Sq. Foot Cost: **$ 83.79**

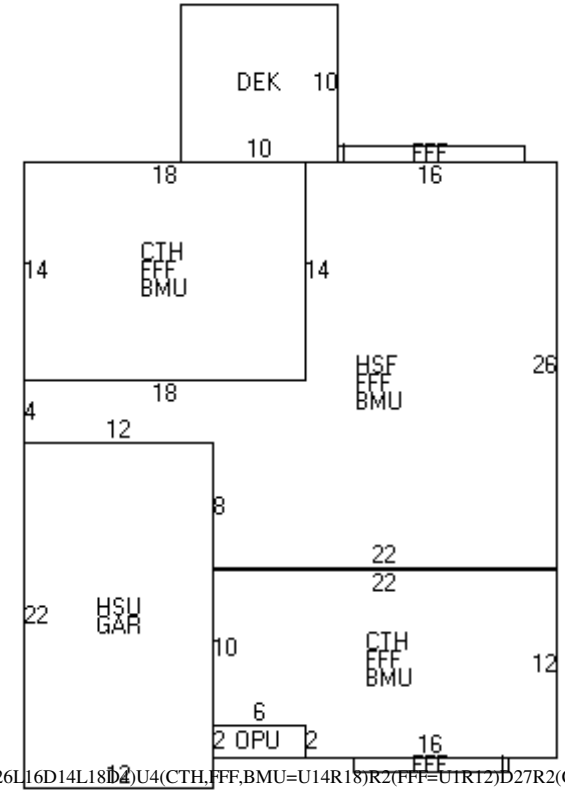

(HSU,GAR=L12U22)(HSF,FFF,BMU=R12D8R22U26L16D14L18D4)U4(CTH,FFF,BMU=U14R18)R2(FFF=U1R12)D27R2(CTH,FFF,BMU=D12L16IU2L6U10R22)D12L3(FFF=D1L10)U1L3(OPU=L6U2)U36L2(DEK=R10U10)

BUILDING SUB AREA DETAILS

ID	Description	Area	Adj.	Effect.
HSU	1/2 STRY UNFIN	264	0.25	66
GAR	GARAGE	264	0.45	119
HSF	1/2 STRY FIN	536	0.50	268
FFF	FST FLR FIN	1062	1.00	1062
BMU	BSMNT	1040	0.15	156
CTH	CATHEDRAL	504	0.10	50
OPU	OPEN PORCH	12	0.15	2
DEK	DECK/ENTRANCE	100	0.10	10
GLA:	**1,330**	**3,782**		**1,733**

2013 BASE YEAR BUILDING VALUATION

Market Cost New:		**$ 145,208**
Year Built:		**2004**
Condition For Age:	AVERAGE	**8 %**
Physical:		
Functional:		
Economic:		
Temporary:		
Total Depreciation:		**8 %**
Building Value:		**$ 133,600**

OWNER INFORMATION

MOORE, BARBARA D
GOODRICH, RICHARD A
18 ASH DRIVE

KINGSTON, NH 03848

SALES HISTORY

Date	Book	Page	Type	Price	Grantor
07/18/2016	5733	0183	Q I	220,500	O'NEIL, JOSEPH F.-TRST
11/02/2011	5258	0679	U I 38		O'NEIL, JOSEPH F.
02/04/2011	5192	195	U I 38		O'NEIL, JOSEPH F. - TR
04/05/2010	5100	2821	U I 38		O'NEIL, JOSEPH F.
12/29/2009	5078	2045	Q I	176,000	PATRICK, CLAUDETTE D.,

PICTURE

LISTING HISTORY

01/13/14 KCM
05/12/10 KCM
04/06/04 SH X

NOTES

YELLOW. D-29813. D-30670.

EXTRA FEATURES VALUATION

Feature Type	Units	Lngth x Width	Size Adj	Rate	Cond	Market Value	Notes
FIREPLACE GAS	1		100	2,500.00	100	2,500	
ASH DR, CONDOS	1		100	32,000.00	100	32,000	
						34,500	

MUNICIPAL SOFTWARE BY AVITAR.

KINGSTON ASSESSING OFFICE

PARCEL TOTAL TAXABLE VALUE

Year	Building	Features	Land
2014	$ 133,600	$ 34,500	$ 0
		Parcel Total: $ 168,100	
2015	$ 133,600	$ 34,500	$ 0
		Parcel Total: $ 168,100	
2016	**$ 133,600**	**$ 34,500**	**$ 0**
		Parcel Total: $ 168,100	

LAND VALUATION

Zone: RRAQ RR W/AQUIFER **Minimum Acreage:** 3.00 **Minimum Frontage:** 200 **Site:** **Driveway:** **Road:**

Land Type	Units	Base Rate	NC	Adj	Site	Road	DWay	Topography	Cond	Ad Valorem	SPI	R	Tax Value	Notes
1F RES	0		E											
	0 ac													

Map: 000R16 **Lot: 000005** **Sub: 005-11** **Card: 1 of 1** **18 ASH DR** **KINGSTON** **Printed: 08/02/2016**

PICTURE

OWNER

MOORE, BARBARA D
GOODRICH, RICHARD A
18 ASH DRIVE

KINGSTON, NH 03848

TAXABLE DISTRICTS

District	Percentage

PERMITS

Date	Permit ID	Permit Type	Notes
02/20/04	R16-5-5-11	OCCUPANCY PERMIT	1 BR CONDO
08/01/03	R16-5-5-11	BUILDING	CONDOMINIUM UNIT #11

BUILDING DETAILS

Model: **1.50 STORY FRAME CONDO**
Roof: **GABLE HIP/ASPHALT**
Ext: **VINYL SIDING**
Int: **DRYWALL**
Floor: **CARPET/LINOLEUM OR SIM**
Heat: **GAS/FA DUCTED**
Bedrooms: **1** Baths: **2.0** Fixtures:
Extra Kitchens: Fireplaces:
A/C: **Yes 100.00 %** Generators:
Quality: **A0 AVG**
Com. Wall:
Size Adj: **1.0281** Base Rate: **RCT 84.00**
Bldg. Rate: **0.9975**
Sq. Foot Cost: **$ 83.79**

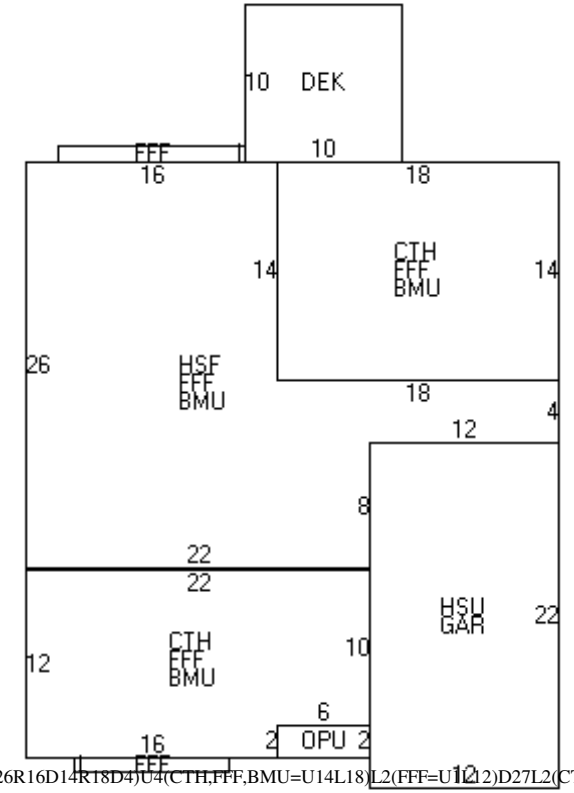

(HSU,GAR=R12U22)(HSF,FFF,BMU=L12D8L22U26R16D14R18D4)U4(CTH,FFF,BMU=U14L18)L2(FFF=U12)D27L2(CTH,FFF,BMU=D12R16IU2R6U10L22)D12R3(FFF=D1R10)U1R3(OPU=R6U2)U36R2(DEK=L10U10)

BUILDING SUB AREA DETAILS

ID	Description	Area	Adj.	Effect.
HSU	1/2 STRY UNFIN	264	0.25	66
GAR	GARAGE	264	0.45	119
HSF	1/2 STRY FIN	536	0.50	268
FFF	FST FLR FIN	1062	1.00	1062
BMU	BSMNT	1040	0.15	156
CTH	CATHEDRAL	504	0.10	50
OPU	OPEN PORCH	12	0.15	2
DEK	DECK/ENTRANCE	100	0.10	10
GLA:	**1,330**	**3,782**		**1,733**

2013 BASE YEAR BUILDING VALUATION

Market Cost New:		**$ 145,208**
Year Built:		**2004**
Condition For Age:	AVERAGE	**8 %**
Physical:		
Functional:		
Economic:		
Temporary:		
Total Depreciation:		**8 %**
Building Value:		**$ 133,600**

OWNER INFORMATION

AUTIO, SHIRLEY
HEATH, LARRY G.
20 ASH DRIVE

KINGSTON, NH 03848

SALES HISTORY

Date	Book	Page	Type	Price	Grantor
01/04/2005	4420	1643	U I 38		AUTIO
05/03/2004	4282	1549	Q I	224,900	RIVER VALLEY

PICTURE

LISTING HISTORY

01/13/14 KCM
05/12/10 KCM
04/16/04 SH O

NOTES

YELLOW

EXTRA FEATURES VALUATION

Feature Type	Units	Lngth x Width	Size Adj	Rate	Cond	Market Value	Notes
FIREPLACE GAS	1		100	2,500.00	100	2,500	
ASH DR, CONDOS	1		100	32,000.00	100	32,000	
						34,500	

MUNICIPAL SOFTWARE BY AVITAR.

KINGSTON ASSESSING OFFICE

PARCEL TOTAL TAXABLE VALUE

Year	Building	Features	Land
2014	$ 133,600	$ 34,500	$ 0
		Parcel Total: $ 168,100	
2015	$ 133,600	$ 34,500	$ 0
		Parcel Total: $ 168,100	
2016	**$ 133,600**	**$ 34,500**	**$ 0**
		Parcel Total: $ 168,100	

LAND VALUATION

Zone: RRAQ RR W/AQUIFER **Minimum Acreage:** 3.00 **Minimum Frontage:** 200 **Site:** **Driveway:** **Road:**

Land Type	Units	Base Rate	NC	Adj	Site	Road	DWay	Topography	Cond	Ad Valorem	SPI	R	Tax Value	Notes
1F RES	0		E											
	0 ac													

Map: 000R16 **Lot: 000005** **Sub: 005-12** **Card: 1 of 1** **20 ASH DR** **KINGSTON** **Printed: 08/02/2016**

PICTURE

OWNER

AUTIO, SHIRLEY
HEATH, LARRY G.
20 ASH DRIVE

KINGSTON, NH 03848

TAXABLE DISTRICTS

District	Percentage

PERMITS

Date	Permit ID	Permit Type	Notes
08/01/03	R16-5-5-12	BUILDING	CONDOMINIUM UNIT #12

BUILDING DETAILS

Model: **1.50 STORY FRAME CONDO**
Roof: **GABLE HIP/ASPHALT**
Ext: **VINYL SIDING**
Int: **DRYWALL**
Floor: **CARPET/LINOLEUM OR SIM**
Heat: **GAS/FA DUCTED**
Bedrooms: **1** Baths: **2.0** Fixtures:
Extra Kitchens: Fireplaces:
A/C: **Yes 100.00 %** Generators:
Quality: **A0 AVG**
Com. Wall:
Size Adj: **1.0281** Base Rate: **RCT 84.00**
Bldg. Rate: **0.9975**
Sq. Foot Cost: **$ 83.79**

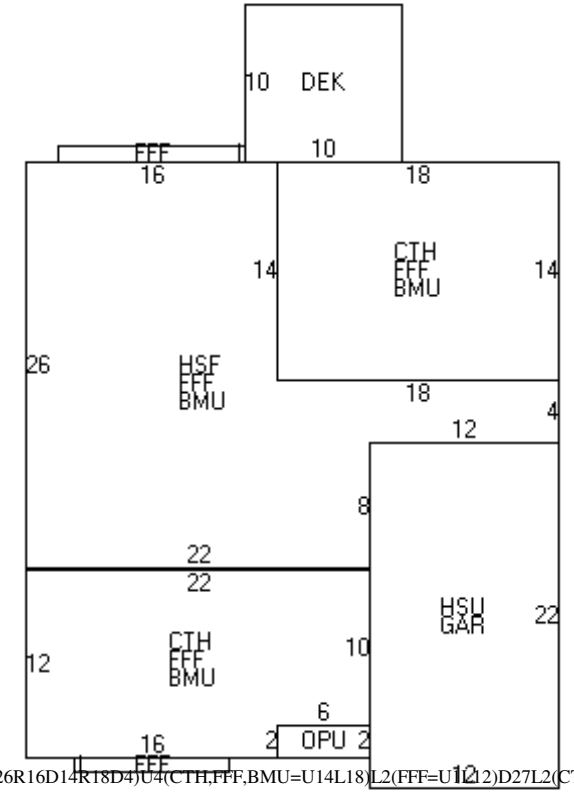

(HSU,GAR=R12U22)(HSF,FFF,BMU=L12D8L22U26R16D14R18D4)U4(CTH,FFF,BMU=U14L18)L2(FFF=U12)D27L2(CTH,FFF,BMU=D12R16IU2R6U10L22)D12R3(FFF=D1R10)U1R3(OPU=R6U2)U36R2(DEK=L10U10)

BUILDING SUB AREA DETAILS

ID	Description	Area	Adj.	Effect.
HSU	1/2 STRY UNFIN	264	0.25	66
GAR	GARAGE	264	0.45	119
HSF	1/2 STRY FIN	536	0.50	268
FFF	FST FLR FIN	1062	1.00	1062
BMU	BSMNT	1040	0.15	156
CTH	CATHEDRAL	504	0.10	50
OPU	OPEN PORCH	12	0.15	2
DEK	DECK/ENTRANCE	100	0.10	10
GLA:	**1,330**	**3,782**		**1,733**

2013 BASE YEAR BUILDING VALUATION

Market Cost New:		**$ 145,208**
Year Built:		**2004**
Condition For Age:	AVERAGE	**8 %**
Physical:		
Functional:		
Economic:		
Temporary:		
Total Depreciation:		**8 %**
Building Value:		**$ 133,600**

OWNER INFORMATION

WILLIAMS, RALPH, JR. & JUDITH
22 ASH DR REALTY TRUST
22 ASH DRIVE

KINGSTON, NH 03848

SALES HISTORY

Date	Book	Page	Type	Price	Grantor
08/07/2006	4691	2758	U I 38		WILLIAMS
09/27/2005	4554	1800	Q I	275,000	BONNELL, SAMUEL & MARY
12/23/2003	4212	1299	Q I	230,000	RIVER VALLEY DEV.

PICTURE

LISTING HISTORY

01/13/14 KCML
05/13/10 KCM
04/06/04 SH X

NOTES

YELLOW

EXTRA FEATURES VALUATION

Feature Type	Units	Lngth x Width	Size Adj	Rate	Cond	Market Value	Notes
FIREPLACE GAS	1		100	2,500.00	100	2,500	
ASH DR, CONDOS	1		100	32,000.00	100	32,000	
						34,500	

MUNICIPAL SOFTWARE BY AVITAR

KINGSTON ASSESSING OFFICE

PARCEL TOTAL TAXABLE VALUE

Year	Building	Features	Land
2014	$ 133,600	$ 34,500	$ 0
		Parcel Total: $ 168,100	
2015	$ 133,600	$ 34,500	$ 0
		Parcel Total: $ 168,100	
2016	**$ 133,600**	**$ 34,500**	**$ 0**
		Parcel Total: $ 168,100	

LAND VALUATION

Zone: RRAQ RR W/AQUIFER **Minimum Acreage:** 3.00 **Minimum Frontage:** 200 **Site:** **Driveway:** **Road:**

Land Type	Units	Base Rate	NC	Adj	Site	Road	DWay	Topography	Cond	Ad Valorem	SPI	R	Tax Value	Notes
1F RES	0		E											
	0 ac													

Map: 000R16 **Lot: 000005** **Sub: 005-13** **Card: 1 of 1** **22 ASH DR** **KINGSTON** **Printed: 08/02/2016**

PICTURE

OWNER

WILLIAMS, RALPH, JR. & JUDITH
22 ASH DR REALTY TRUST
22 ASH DRIVE

KINGSTON, NH 03848

TAXABLE DISTRICTS

District	Percentage

PERMITS

Date	Permit ID	Permit Type	Notes
08/01/03	R16-5-5-13	BUILDING	CONDOMINIUM UNIT #13

BUILDING DETAILS

Model: **1.50 STORY FRAME CONDO**
Roof: **GABLE HIP/ASPHALT**
Ext: **VINYL SIDING**
Int: **DRYWALL**
Floor: **CARPET/LINOLEUM OR SIM**
Heat: **GAS/FA DUCTED**
Bedrooms: **1** Baths: **2.0** Fixtures:
Extra Kitchens: Fireplaces:
A/C: **Yes 100.00 %** Generators:
Quality: **A0 AVG**
Com. Wall:
Size Adj: **1.0281** Base Rate: **RCT 84.00**
Bldg. Rate: **0.9975**
Sq. Foot Cost: **$ 83.79**

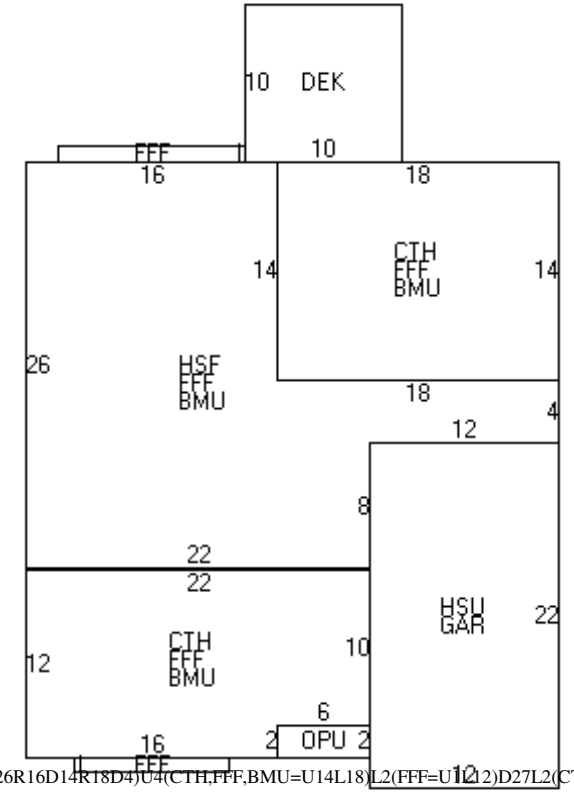

(HSU,GAR=R12U22)(HSF,FFF,BMU=L12D8L22U26R16D14R18D4)U4(CTH,FFF,BMU=U14L18)L2(FFF=U12)D27L2(CTH,FFF,BMU=D12R16IU2R6U10L22)D12R3(FFF=D1R10)U1R3(OPU=R6U2)U36R2(DEK=L10U10)

BUILDING SUB AREA DETAILS

ID	Description	Area	Adj.	Effect.
HSU	1/2 STRY UNFIN	264	0.25	66
GAR	GARAGE	264	0.45	119
HSF	1/2 STRY FIN	536	0.50	268
FFF	FST FLR FIN	1062	1.00	1062
BMU	BSMNT	1040	0.15	156
CTH	CATHEDRAL	504	0.10	50
OPU	OPEN PORCH	12	0.15	2
DEK	DECK/ENTRANCE	100	0.10	10
GLA:	**1,330**	**3,782**		**1,733**

2013 BASE YEAR BUILDING VALUATION

Market Cost New:		**$ 145,208**
Year Built:		**2004**
Condition For Age:	AVERAGE	**8 %**
Physical:		
Functional:		
Economic:		
Temporary:		
Total Depreciation:		**8 %**
Building Value:		**$ 133,600**

OWNER INFORMATION

NORWAY, DIANE M

45 ASH DRIVE #14

KINGSTON, NH 03848

SALES HISTORY

Date	Book	Page	Type	Price	Grantor
05/13/2014	5530	1559	Q I	190,000	BABINE, DAVID
04/30/2004	4282	0198	Q I	220,000	RIVER VALLEY DEV. CORP

PICTURE

LISTING HISTORY

01/14/14	KCM	
05/14/10	KCM	CYCLICAL
03/07/05	BW O	UNIT 100%-BW
04/06/04	SH X	80% COMPLETE 2004,

NOTES

D-30670. YELLOW.

EXTRA FEATURES VALUATION

Feature Type	Units	Lngth x Width	Size Adj	Rate	Cond	Market Value	Notes
FIREPLACE GAS	1		100	2,500.00	100	2,500	
ASH DR, CONDOS	1		100	32,000.00	100	32,000	
						34,500	

MUNICIPAL SOFTWARE BY AVITAR

KINGSTON ASSESSING OFFICE

PARCEL TOTAL TAXABLE VALUE

Year	Building	Features	Land
2014	$ 134,900	$ 34,500	$ 0
		Parcel Total: $ 169,400	
2015	$ 134,900	$ 34,500	$ 0
		Parcel Total: $ 169,400	
2016	**$ 134,900**	**$ 34,500**	**$ 0**
		Parcel Total: $ 169,400	

LAND VALUATION

Zone: RRAQ RR W/AQUIFER **Minimum Acreage:** 3.00 **Minimum Frontage:** 200 **Site:** **Driveway:** **Road:**

Land Type	Units	Base Rate	NC	Adj	Site	Road	DWay	Topography	Cond	Ad Valorem	SPI	R	Tax Value	Notes
1F RES	0		E											
	0 ac													

PICTURE

OWNER

NORWAY, DIANE M

45 ASH DRIVE #14

KINGSTON, NH 03848

TAXABLE DISTRICTS

District	Percentage

PERMITS

Date	Permit ID	Permit Type	Notes
11/01/03	R16-5-5-14	BUILDING	CONDOMINIUM UNIT #14

BUILDING DETAILS

Model: **1.50 STORY FRAME TOWNHOUSE**
Roof: **GABLE HIP/ASPHALT**
Ext: **VINYL SIDING**
Int: **DRYWALL**
Floor: **CARPET**
Heat: **GAS/FA DUCTED**
Bedrooms: **1** Baths: **2.0** Fixtures:
Extra Kitchens: Fireplaces:
A/C: **Yes 100.00 %** Generators:
Quality: **A0 AVG**
Com. Wall:
Size Adj: **1.0281** Base Rate: **RCT 84.00**
Bldg. Rate: **1.0075**
Sq. Foot Cost: **$ 84.63**

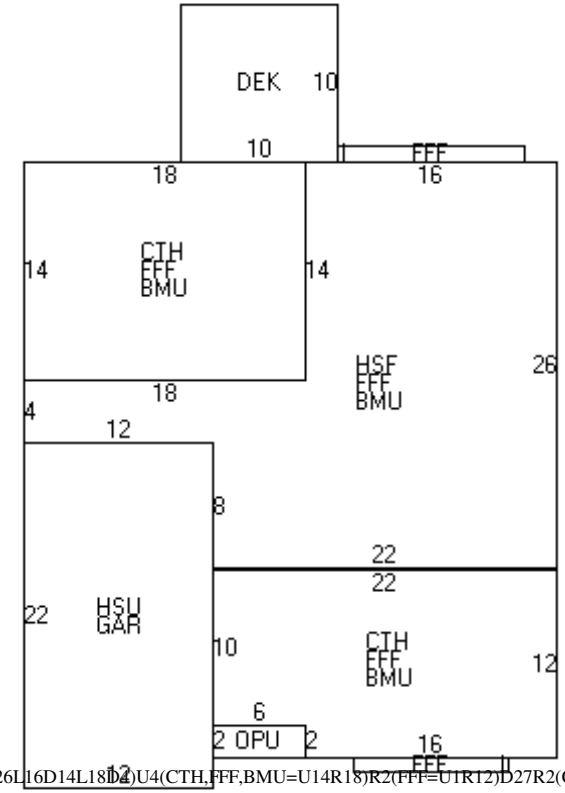

(HSU,GAR=L12U22)(HSF,FFF,BMU=R12D8R22U26L16D14L18D4)U4(CTH,FFF,BMU=U14R18)R2(FFF=U1R12)D27R2(CTH,FFF,BMU=D12L16IU2L6U10R22)D12L3(FFF=D1L10)U1L3(OPU=L6U2)U36L2(DEK=R10U10)

BUILDING SUB AREA DETAILS

ID	Description	Area	Adj.	Effect.
HSU	1/2 STRY UNFIN	264	0.25	66
GAR	GARAGE	264	0.45	119
HSF	1/2 STRY FIN	536	0.50	268
FFF	FST FLR FIN	1062	1.00	1062
BMU	BSMNT	1040	0.15	156
CTH	CATHEDRAL	504	0.10	50
OPU	OPEN PORCH	12	0.15	2
DEK	DECK/ENTRANCE	100	0.10	10
GLA:	**1,330**	**3,782**		**1,733**

2013 BASE YEAR BUILDING VALUATION

Market Cost New:		**$ 146,664**
Year Built:		**2004**
Condition For Age:	AVERAGE	**8 %**
Physical:		
Functional:		
Economic:		
Temporary:		
Total Depreciation:		**8 %**
Building Value:		**$ 134,900**

OWNER INFORMATION

DUFF REVOCABLE REALTY TRUST
ANDREA AND ROBERT DUFF, TRSTEE
43 ASH DRIVE

KINGSTON, NH 03848

SALES HISTORY

Date	Book	Page	Type	Price	Grantor
05/07/2009	5008	868	Q I	199,933	FOUND, MARILYN E.
05/04/2005	4475	2048	U I 38		FOUND
05/14/2004	4291	2913	Q I	224,900	RIVER VALLEY

PICTURE

LISTING HISTORY

01/14/14	KCM
05/14/10	KCM
03/07/05	BW X
04/06/04	SH X

NOTES

YELLOW 80% COMPLETE CHECK 2005, 3/05 EST UNIT 100%. D-30670.

EXTRA FEATURES VALUATION

Feature Type	Units	Lngth x Width	Size Adj	Rate	Cond	Market Value	Notes
FIREPLACE GAS	1		100	2,500.00	100	2,500	
ASH DR, CONDOS	1		100	32,000.00	100	32,000	
						34,500	

MUNICIPAL SOFTWARE BY AVITAR

KINGSTON ASSESSING OFFICE

PARCEL TOTAL TAXABLE VALUE

Year	Building	Features	Land
2014	$ 135,400	$ 34,500	$ 0
		Parcel Total: $ 169,900	
2015	$ 135,400	$ 34,500	$ 0
		Parcel Total: $ 169,900	
2016	**$ 135,400**	**$ 34,500**	**$ 0**
		Parcel Total: $ 169,900	

LAND VALUATION

Zone: RRAQ RR W/AQUIFER **Minimum Acreage:** 3.00 **Minimum Frontage:** 200 **Site:** **Driveway:** **Road:**

Land Type	Units	Base Rate	NC	Adj	Site	Road	DWay	Topography	Cond	Ad Valorem	SPI	R	Tax Value	Notes
1F RES	0		E											
	0 ac													

Map: 000R16 **Lot: 000005** **Sub: 005-15** **Card: 1 of 1** **43 ASH DR** **KINGSTON** **Printed: 08/02/2016**

PICTURE

OWNER

DUFF REVOCABLE REALTY TRUST
ANDREA AND ROBERT DUFF, TRSTEE
43 ASH DRIVE

KINGSTON, NH 03848

TAXABLE DISTRICTS

District	Percentage

PERMITS

Date	Permit ID	Permit Type	Notes
05/22/09	R16-5-5-15	ALTERATION	INSTALL HANDICAP TUB
11/01/03	R16-5-5-15	BUILDING	CONDOMINIIUM UNIT #15

BUILDING DETAILS

Model: **1.50 STORY FRAME TOWNHOUSE**
Roof: **GABLE HIP/ASPHALT**
Ext: **VINYL SIDING**
Int: **DRYWALL**
Floor: **CARPET/HARDWOOD**
Heat: **GAS/FA DUCTED**
Bedrooms: **1** Baths: **2.0** Fixtures:
Extra Kitchens: Fireplaces:
A/C: **Yes 100.00 %** Generators:
Quality: **A0 AVG**
Com. Wall:
Size Adj: **1.0269** Base Rate: **RCT 84.00**
Bldg. Rate: **1.0064**
Sq. Foot Cost: **$ 84.53**

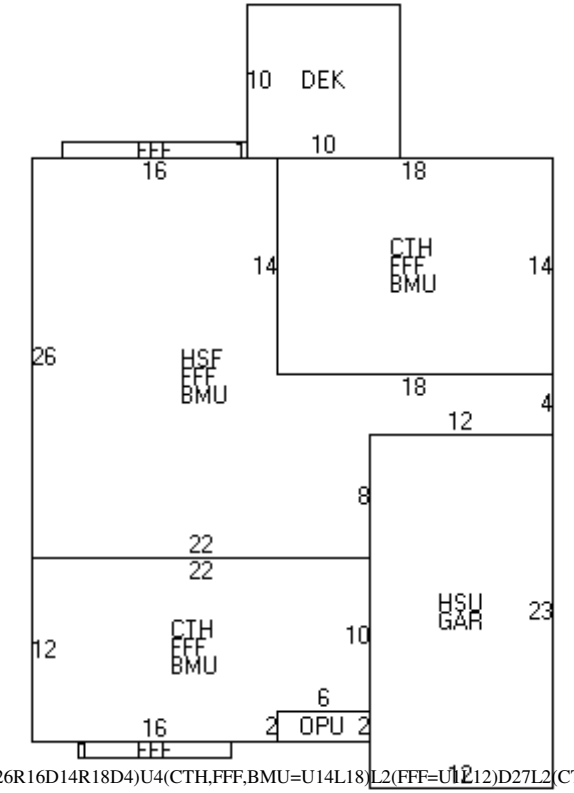

(HSU,GAR=R12U23)(HSF,FFF,BMU=L12D8L22U26R16D14R18D4)U4(CTH,FFF,BMU=U14L18)L2(FFF=U12L12)D27L2(CTH,FFF,BMU=D12R16IU2R6U10L22)D12R3(FFF=D1R10)U1R3(OPU=R6U2)U36R2(DEK=L10U10)

BUILDING SUB AREA DETAILS

ID	Description	Area	Adj.	Effect.
HSU	1/2 STRY UNFIN	276	0.25	69
GAR	GARAGE	276	0.45	124
HSF	1/2 STRY FIN	536	0.50	268
FFF	FST FLR FIN	1062	1.00	1062
BMU	BSMNT	1040	0.15	156
CTH	CATHEDRAL	504	0.10	50
OPU	OPEN PORCH	12	0.15	2
DEK	DECK/ENTRANCE	100	0.10	10
GLA:	**1,330**	**3,806**		**1,741**

2013 BASE YEAR BUILDING VALUATION

Market Cost New:		**$ 147,167**
Year Built:		**2004**
Condition For Age:	AVERAGE	**8 %**
Physical:		
Functional:		
Economic:		
Temporary:		
Total Depreciation:		**8 %**
Building Value:		**$ 135,400**

OWNER INFORMATION

FOURNIER, STEPHEN P
FOURNIER, PAULA M
41 ASH DRIVE

KINGSTON, NH 03848

SALES HISTORY

Date	Book	Page	Type	Price	Grantor
08/11/2015	5644	1555	Q I	218,000	WUJCIK, ANNE E.
09/20/2012	5358	1010	Q I	163,000	DEACY, BARBARA, TR. DE
06/13/2008	4926	1093	Q I	214,000	REYNOLDS/GILARDI
10/19/2007	4854	0967	U I 38		REYNOLDS
05/24/2004	4296	2021	Q I	224,900	RIVER VALLEY

PICTURE

LISTING HISTORY

01/14/14	KCM	
04/23/13	KC M	
05/14/10	KCM	
03/07/05	BW X	EST UNIT 100%
04/06/04	SH X	80% COMPLETE CHECK 2005

NOTES

YELLOW

EXTRA FEATURES VALUATION

Feature Type	Units	Lngth x Width	Size Adj	Rate	Cond	Market Value	Notes
FIREPLACE GAS	1		100	2,500.00	100	2,500	
ASH DR, CONDOS	1		100	32,000.00	100	32,000	
						34,500	

MUNICIPAL SOFTWARE BY AVITAR.

KINGSTON ASSESSING OFFICE

PARCEL TOTAL TAXABLE VALUE

Year	Building	Features	Land
2014	$ 134,900	$ 34,500	$ 0
		Parcel Total: $ 169,400	
2015	$ 134,900	$ 34,500	$ 0
		Parcel Total: $ 169,400	
2016	**$ 134,900**	**$ 34,500**	**$ 0**
		Parcel Total: $ 169,400	

LAND VALUATION

Zone: RRAQ RR W/AQUIFER **Minimum Acreage:** 3.00 **Minimum Frontage:** 200 **Site:** **Driveway:** **Road:**

Land Type	Units	Base Rate	NC	Adj	Site	Road	DWay	Topography	Cond	Ad Valorem	SPI	R	Tax Value	Notes
1F RES	0		E											
	0 ac													

PICTURE

OWNER

FOURNIER, STEPHEN P
FOURNIER, PAULA M
41 ASH DRIVE

KINGSTON, NH 03848

TAXABLE DISTRICTS

District	Percentage

PERMITS

Date	Permit ID	Permit Type	Notes
11/01/03	R16-5-5-16	BUILDING	CONDOMINIUM UNIT #16

BUILDING DETAILS

Model: **1.50 STORY FRAME CONDO**
Roof: **GABLE HIP/ASPHALT**
Ext: **VINYL SIDING**
Int: **DRYWALL**
Floor: **CARPET/HARDWOOD**
Heat: **GAS/FA DUCTED**
Bedrooms: **1** Baths: **2.0** Fixtures:
Extra Kitchens: Fireplaces:
A/C: **Yes 100.00 %** Generators:
Quality: **A0 AVG**
Com. Wall:
Size Adj: **1.0281** Base Rate: **RCT 84.00**
Bldg. Rate: **1.0075**
Sq. Foot Cost: **$ 84.63**

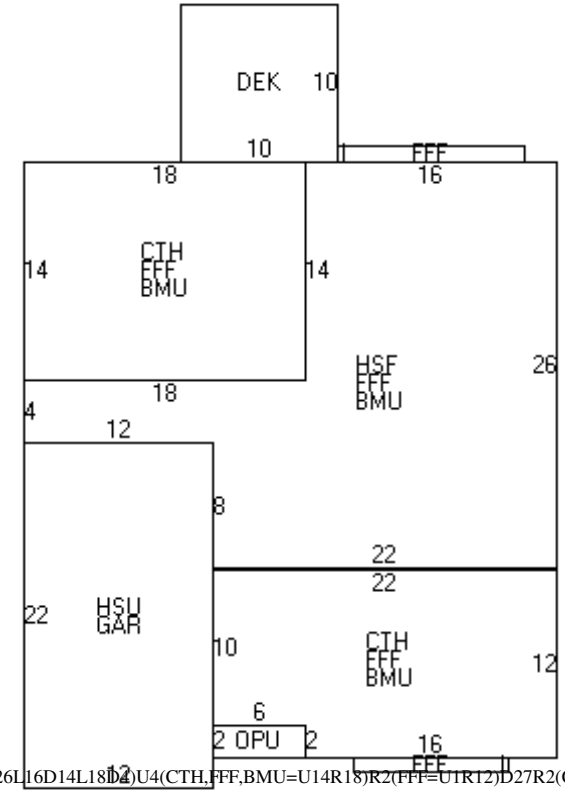

(HSU,GAR=L12U22)(HSF,FFF,BMU=R12D8R22U26L16D14L18D4)U4(CTH,FFF,BMU=U14R18)R2(FFF=U1R12)D27R2(CTH,FFF,BMU=D12L16IU2L6U10R22)D12L3(FFF=D1L10)U1L3(OPU=L6U2)U36L2(DEK=R10U10)

BUILDING SUB AREA DETAILS

ID	Description	Area	Adj.	Effect.
HSU	1/2 STRY UNFIN	264	0.25	66
GAR	GARAGE	264	0.45	119
HSF	1/2 STRY FIN	536	0.50	268
FFF	FST FLR FIN	1062	1.00	1062
BMU	BSMNT	1040	0.15	156
CTH	CATHEDRAL	504	0.10	50
OPU	OPEN PORCH	12	0.15	2
DEK	DECK/ENTRANCE	100	0.10	10
GLA:	**1,330**	**3,782**		**1,733**

2013 BASE YEAR BUILDING VALUATION

Market Cost New:		**$ 146,664**
Year Built:		**2004**
Condition For Age:	AVERAGE	**8 %**
Physical:		
Functional:		
Economic:		
Temporary:		
Total Depreciation:		**8 %**
Building Value:		**$ 134,900**

OWNER INFORMATION

SMITH, EDWARD A
SMITH, NANCY J
39 ASH DRIVE

KINGSTON, NH 03848

SALES HISTORY

Date	Book	Page	Type	Price	Grantor
06/24/2016	5726	1845	Q I	226,600	PETERS, SHIRLEY
12/22/2004	4415	0437	Q I	249,000	CASEY, CAROL A.
04/30/2004	4281	2687	Q I	219,933	RIVER VALLEY DEV. CORP

PICTURE

LISTING HISTORY

01/14/14	KCM	
05/14/10	KCM	
03/07/05	BW X	EST UNIT 100%
04/06/04	SH X	80% COMPLETE 2004. CHECI

NOTES

YELLOW;

EXTRA FEATURES VALUATION

Feature Type	Units	Lngth x Width	Size Adj	Rate	Cond	Market Value	Notes
FIREPLACE GAS	1		100	2,500.00	100	2,500	
ASH DR, CONDOS	1		100	32,000.00	100	32,000	
						34,500	

MUNICIPAL SOFTWARE BY AVITAR

KINGSTON ASSESSING OFFICE

PARCEL TOTAL TAXABLE VALUE

Year	Building	Features	Land
2014	$ 134,900	$ 34,500	$ 0
		Parcel Total: $ 169,400	
2015	$ 134,900	$ 34,500	$ 0
		Parcel Total: $ 169,400	
2016	**$ 134,900**	**$ 34,500**	**$ 0**
		Parcel Total: $ 169,400	

LAND VALUATION

Zone: RRAQ RR W/AQUIFER **Minimum Acreage:** 3.00 **Minimum Frontage:** 200 **Site:** **Driveway:** **Road:**

Land Type	Units	Base Rate	NC	Adj	Site	Road	DWay	Topography	Cond	Ad Valorem	SPI	R	Tax Value	Notes
1F RES	0		E											
	0 ac													

PICTURE

OWNER

SMITH, EDWARD A
SMITH, NANCY J
39 ASH DRIVE

KINGSTON, NH 03848

TAXABLE DISTRICTS

District	Percentage

PERMITS

Date	Permit ID	Permit Type	Notes
11/01/03	R16-5-5-17	BUILDING	CONDOMINIUM UNIT #17

BUILDING DETAILS

Model: **1.50 STORY FRAME CONDO**
Roof: **GABLE HIP/ASPHALT**
Ext: **VINYL SIDING**
Int: **DRYWALL**
Floor: **CARPET/HARDWOOD**
Heat: **GAS/FA DUCTED**
Bedrooms: **1** Baths: **2.0** Fixtures:
Extra Kitchens: Fireplaces:
A/C: **Yes 100.00 %** Generators:
Quality: **A0 AVG**
Com. Wall:
Size Adj: **1.0281** Base Rate: **RCT 84.00**
Bldg. Rate: **1.0075**
Sq. Foot Cost: **$ 84.63**

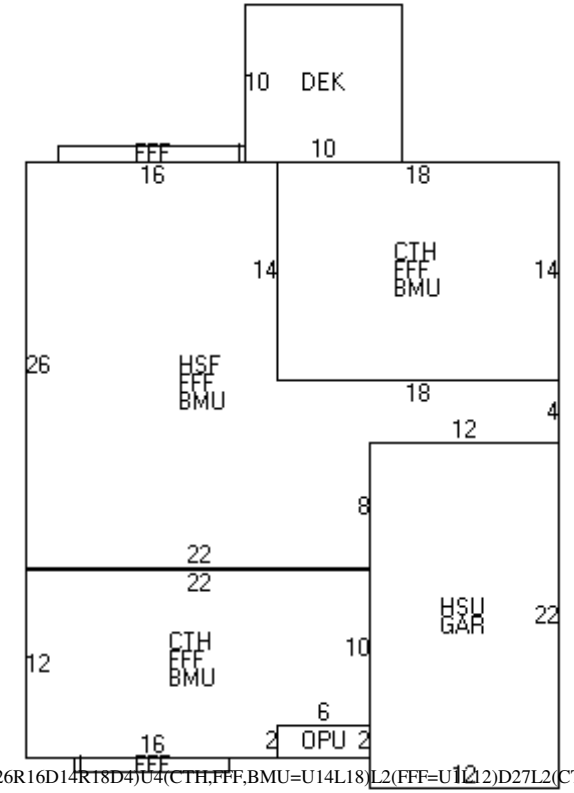

(HSU,GAR=R12U22)(HSF,FFF,BMU=L12D8L22U26R16D14R18D4)U4(CTH,FFF,BMU=U14L18)L2(FFF=U12)D27L2(CTH,FFF,BMU=D12R16IU2R6U10L22)D12R3(FFF=D1R10)U1R3(OPU=R6U2)U36R2(DEK=L10U10)

BUILDING SUB AREA DETAILS

ID	Description	Area	Adj.	Effect.
HSU	1/2 STRY UNFIN	264	0.25	66
GAR	GARAGE	264	0.45	119
HSF	1/2 STRY FIN	536	0.50	268
FFF	FST FLR FIN	1062	1.00	1062
BMU	BSMNT	1040	0.15	156
CTH	CATHEDRAL	504	0.10	50
OPU	OPEN PORCH	12	0.15	2
DEK	DECK/ENTRANCE	100	0.10	10
GLA:	**1,330**	**3,782**		**1,733**

2013 BASE YEAR BUILDING VALUATION

Market Cost New:		**$ 146,664**
Year Built:		**2004**
Condition For Age:	AVERAGE	**8 %**
Physical:		
Functional:		
Economic:		
Temporary:		
Total Depreciation:		**8 %**
Building Value:		**$ 134,900**

OWNER INFORMATION

OUELLET, HELEN

37 ASH DRIVE

KINGSTON, NH 03848

SALES HISTORY

Date	Book	Page	Type	Price	Grantor
07/30/2004	4337	1806	Q I	229,933	RIVER VALLEY

PICTURE

LISTING HISTORY

01/14/14 KCM
05/14/10 KCM
03/07/05 BW X
04/06/04 SH X

NOTES

1ST FLOOR FRAME ONLY, CHECK 2005. ADJ AMENITIES COND WHEN FINISHED, 3/05 EST UNIT 100%-BW

EXTRA FEATURES VALUATION

Feature Type	Units	Lngth x Width	Size Adj	Rate	Cond	Market Value	Notes
ASH DR, CONDOS	1		100	32,000.00	100	32,000	
FIREPLACE GAS	1		100	2,500.00	100	2,500	
						34,500	

MUNICIPAL SOFTWARE BY AVITAR

KINGSTON ASSESSING OFFICE

PARCEL TOTAL TAXABLE VALUE

Year	Building	Features	Land
2014	$ 134,900	$ 34,500	$ 0
		Parcel Total: $ 169,400	
2015	$ 134,900	$ 34,500	$ 0
		Parcel Total: $ 169,400	
2016	**$ 134,900**	**$ 34,500**	**$ 0**
		Parcel Total: $ 169,400	

LAND VALUATION

Zone: RRAQ RR W/AQUIFER **Minimum Acreage:** 3.00 **Minimum Frontage:** 200 **Site:** **Driveway:** **Road:**

Land Type	Units	Base Rate	NC	Adj	Site	Road	DWay	Topography	Cond	Ad Valorem	SPI	R	Tax Value	Notes
1F RES	0		E											
	0 ac													

Map: 000R16 **Lot: 000005** **Sub: 005-18** **Card: 1 of 1** **37 ASH DR** **KINGSTON** **Printed: 08/02/2016**

PICTURE

OWNER

OUELLET, HELEN

37 ASH DRIVE

KINGSTON, NH 03848

TAXABLE DISTRICTS

District	Percentage

PERMITS

Date	Permit ID	Permit Type	Notes
11/01/03	R16-5-5-18	BUILDING	CONDOMINIUM UNIT 18

BUILDING DETAILS

Model: **1.50 STORY FRAME TOWNHOUSE**
Roof: **GABLE HIP/ASPHALT**
Ext: **VINYL SIDING**
Int: **DRYWALL**
Floor: **CARPET/HARDWOOD**
Heat: **GAS/FA DUCTED**
Bedrooms: **1** Baths: **2.0** Fixtures:
Extra Kitchens: Fireplaces:
A/C: **Yes 100.00 %** Generators:
Quality: **A0 AVG**
Com. Wall:
Size Adj: **1.0281** Base Rate: **RCT 84.00**
Bldg. Rate: **1.0075**
Sq. Foot Cost: **$ 84.63**

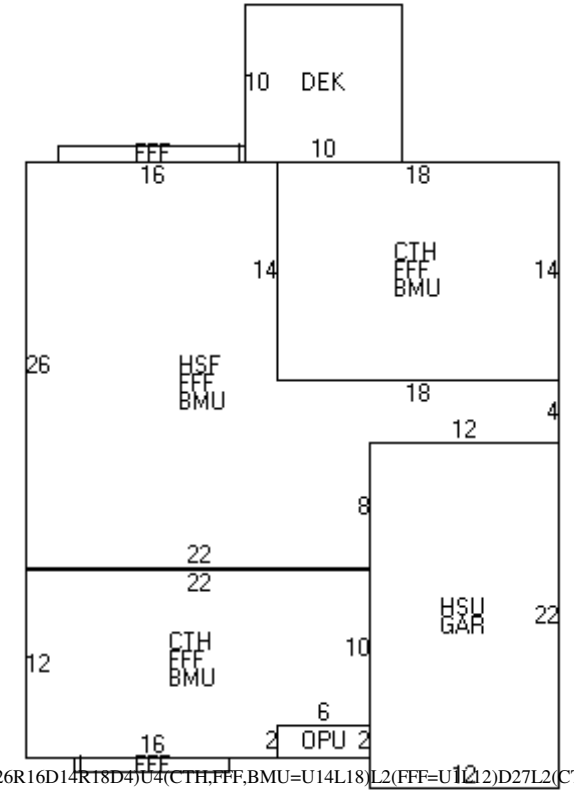

(HSU,GAR=R12U22)(HSF,FFF,BMU=L12D8L22U26R16D14R18D4)U4(CTH,FFF,BMU=U14L18)L2(FFF=U12)D27L2(CTH,FFF,BMU=D12R16IU2R6U10L22)D12R3(FFF=D1R10)U1R3(OPU=R6U2)U36R2(DEK=L10U10)

BUILDING SUB AREA DETAILS

ID	Description	Area	Adj.	Effect.
HSU	1/2 STRY UNFIN	264	0.25	66
GAR	GARAGE	264	0.45	119
HSF	1/2 STRY FIN	536	0.50	268
FFF	FST FLR FIN	1062	1.00	1062
BMU	BSMNT	1040	0.15	156
CTH	CATHEDRAL	504	0.10	50
OPU	OPEN PORCH	12	0.15	2
DEK	DECK/ENTRANCE	100	0.10	10
GLA:	**1,330**	**3,782**		**1,733**

2013 BASE YEAR BUILDING VALUATION

Market Cost New:		**$ 146,664**
Year Built:		**2004**
Condition For Age:	AVERAGE	**8 %**
Physical:		
Functional:		
Economic:		
Temporary:		
Total Depreciation:		**8 %**
Building Value:		**$ 134,900**

OWNER INFORMATION

MARCIANO, MARCELLA, TR
2005 MARCIANO NOMINEE TRUST
35 ASH DRIVE

KINGSTON, NH 03848-3350

SALES HISTORY

Date	Book	Page	Type	Price	Grantor
05/18/2005	4481	2923	U I 38		MARCIANO
11/22/2004	4398	2477	Q I	225,000	RIVER VALLEY

PICTURE

LISTING HISTORY

01/14/14	KCM
05/14/10	KCM
03/07/05	BW X
04/06/04	SH X

NOTES

1ST FLOOR FRAME ONLY, CHECK 2005. ADJ AMENITIES COND WHEN FINISHED, 3/05 EST UNIT 100%-BW

EXTRA FEATURES VALUATION

Feature Type	Units	Lngth x Width	Size Adj	Rate	Cond	Market Value	Notes
FIREPLACE GAS	1		100	2,500.00	100	2,500	
ASH DR, CONDOS	1		100	32,000.00	100	32,000	
						34,500	

MUNICIPAL SOFTWARE BY AVITAR

KINGSTON ASSESSING OFFICE

PARCEL TOTAL TAXABLE VALUE

Year	Building	Features	Land
2014	$ 135,400	$ 34,500	$ 0
		Parcel Total: $ 169,900	
2015	$ 135,400	$ 34,500	$ 0
		Parcel Total: $ 169,900	
2016	**$ 135,400**	**$ 34,500**	**$ 0**
		Parcel Total: $ 169,900	

LAND VALUATION

Zone: RRAQ RR W/AQUIFER **Minimum Acreage:** 3.00 **Minimum Frontage:** 200 **Site:** **Driveway:** **Road:**

Land Type	Units	Base Rate	NC	Adj	Site	Road	DWay	Topography	Cond	Ad Valorem	SPI	R	Tax Value	Notes
1F RES	0		E											
	0 ac													

Map: 000R16 **Lot: 000005** **Sub: 005-19** **Card: 1 of 1** **35 ASH DR** **KINGSTON** **Printed: 08/02/2016**

PICTURE

OWNER

MARCIANO, MARCELLA, TR
2005 MARCIANO NOMINEE TRUST
35 ASH DRIVE

KINGSTON, NH 03848-3350

TAXABLE DISTRICTS

District	Percentage

PERMITS

Date	Permit ID	Permit Type	Notes
11/01/03	R16-5-5-19	BUILDING	CONDOMINIUM UNIT #19

BUILDING DETAILS

Model: **1.50 STORY FRAME CONDO**
Roof: **GABLE HIP/ASPHALT**
Ext: **VINYL SIDING**
Int: **DRYWALL**
Floor: **CARPET/HARDWOOD**
Heat: **GAS/FA DUCTED**
Bedrooms: **1** Baths: **2.0** Fixtures:
Extra Kitchens: Fireplaces:
A/C: **Yes 100.00 %** Generators:
Quality: **A0 AVG**
Com. Wall:
Size Adj: **1.0269** Base Rate: **RCT 84.00**
Bldg. Rate: **1.0064**
Sq. Foot Cost: **$ 84.53**

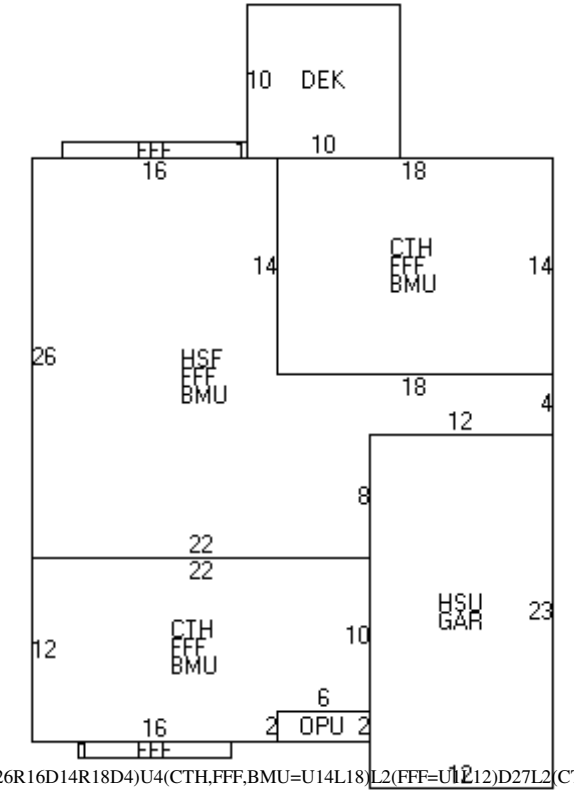

(HSU,GAR=R12U23)(HSF,FFF,BMU=L12D8L22U26R16D14R18D4)U4(CTH,FFF,BMU=U14L18)L2(FFF=U12R12)D27L2(CTH,FFF,BMU=D12R16IU2R6U10L22)D12R3(FFF=D1R10)U1R3(OPU=R6U2)U36R2(DEK=L10U10)

BUILDING SUB AREA DETAILS

ID	Description	Area	Adj.	Effect.
HSU	1/2 STRY UNFIN	276	0.25	69
GAR	GARAGE	276	0.45	124
HSF	1/2 STRY FIN	536	0.50	268
FFF	FST FLR FIN	1062	1.00	1062
BMU	BSMNT	1040	0.15	156
CTH	CATHEDRAL	504	0.10	50
OPU	OPEN PORCH	12	0.15	2
DEK	DECK/ENTRANCE	100	0.10	10
GLA:	**1,330**	**3,806**		**1,741**

2013 BASE YEAR BUILDING VALUATION

Market Cost New:		**$ 147,167**
Year Built:		**2004**
Condition For Age:	AVERAGE	**8 %**
Physical:		
Functional:		
Economic:		
Temporary:		
Total Depreciation:		**8 %**
Building Value:		**$ 135,400**

OWNER INFORMATION

MURPHY, DENNIS J.
MURPHY, EILEEN M.
33 ASH DRIVE

KINGSTON, NH 03848

SALES HISTORY

Date	Book	Page	Type	Price	Grantor
12/05/2012	5384	2689	Q I	169,000	FLETCHER, PAUL E.
03/10/2010	5094	2636	Q I	175,000	MUSUMECI, JOSEPH J.
07/01/2004	4322	390	Q I	226,400	RIVER VALLEY

PICTURE

LISTING HISTORY

01/14/14	KCM	
04/23/13	KC M	
05/14/10	KCM	M/L FOR CYCLICAL
03/07/05	BW O	3/05 UNIT 100%
04/06/04	SH X	1ST FLOOR FRAME ONLY, C

NOTES

D-30670.

EXTRA FEATURES VALUATION

Feature Type	Units	Lngth x Width	Size Adj	Rate	Cond	Market Value	Notes
FIREPLACE GAS	1		100	2,500.00	100	2,500	
ASH DR, CONDOS	1		100	32,000.00	100	32,000	
						34,500	

MUNICIPAL SOFTWARE BY AVITAR

KINGSTON ASSESSING OFFICE

PARCEL TOTAL TAXABLE VALUE

Year	Building	Features	Land
2014	$ 134,900	$ 34,500	$ 0
		Parcel Total: $ 169,400	
2015	$ 134,900	$ 34,500	$ 0
		Parcel Total: $ 169,400	
2016	**$ 134,900**	**$ 34,500**	**$ 0**
		Parcel Total: $ 169,400	

LAND VALUATION

Zone: RRAQ RR W/AQUIFER **Minimum Acreage:** 3.00 **Minimum Frontage:** 200 **Site:** **Driveway:** **Road:**

Land Type	Units	Base Rate	NC	Adj	Site	Road	DWay	Topography	Cond	Ad Valorem	SPI	R	Tax Value	Notes
1F RES	0		E											
	0 ac													

PICTURE

OWNER

MURPHY, DENNIS J.
MURPHY, EILEEN M.
33 ASH DRIVE

KINGSTON, NH 03848

TAXABLE DISTRICTS

District	Percentage

PERMITS

Date	Permit ID	Permit Type	Notes
06/29/04	R16-5-5-20	OCCUPANCY PERMIT	1 BR CONDOMINIUM
11/01/03	R16-5-5-20	BUILDING	CONDOMINIUM UNIT #20

BUILDING DETAILS

Model: **1.50 STORY FRAME TOWNHOUSE**
Roof: **GABLE HIP/ASPHALT**
Ext: **VINYL SIDING**
Int: **DRYWALL**
Floor: **CARPET**
Heat: **GAS/FA DUCTED**
Bedrooms: **1** Baths: **2.0** Fixtures:
Extra Kitchens: Fireplaces:
A/C: **Yes 100.00 %** Generators:
Quality: **A0 AVG**
Com. Wall:
Size Adj: **1.0281** Base Rate: **RCT 84.00**
Bldg. Rate: **1.0075**
Sq. Foot Cost: **$ 84.63**

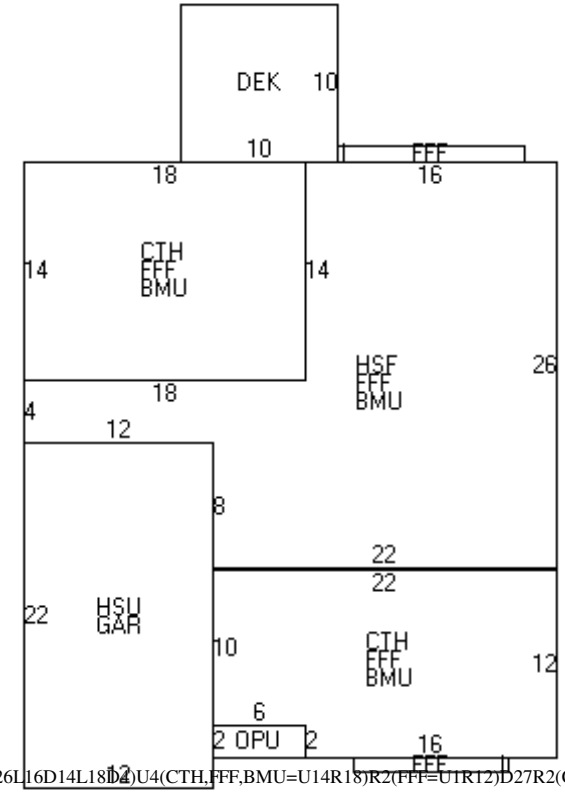

(HSU,GAR=L12U22)(HSF,FFF,BMU=R12D8R22U26L16D14L18D4)U4(CTH,FFF,BMU=U14R18)R2(FFF=U1R12)D27R2(CTH,FFF,BMU=D12L16IU2L6U10R22)D12L3(FFF=D1L10)U1L3(OPU=L6U2)U36L2(DEK=R10U10)

BUILDING SUB AREA DETAILS

ID	Description	Area	Adj.	Effect.
HSU	1/2 STRY UNFIN	264	0.25	66
GAR	GARAGE	264	0.45	119
HSF	1/2 STRY FIN	536	0.50	268
FFF	FST FLR FIN	1062	1.00	1062
BMU	BSMNT	1040	0.15	156
CTH	CATHEDRAL	504	0.10	50
OPU	OPEN PORCH	12	0.15	2
DEK	DECK/ENTRANCE	100	0.10	10
GLA:	**1,330**	**3,782**		**1,733**

2013 BASE YEAR BUILDING VALUATION

Market Cost New:		**$ 146,664**
Year Built:		**2004**
Condition For Age:	AVERAGE	**8 %**
Physical:		
Functional:		
Economic:		
Temporary:		
Total Depreciation:		**8 %**
Building Value:		**$ 134,900**

OWNER INFORMATION

BLOWERS, FLOYD H
BLOWERS, ELENA
31 ASH DRIVE

KINGSTON, NH 03848

SALES HISTORY

Date	Book	Page	Type	Price	Grantor
10/21/2015	5664	0732	Q I	225,000	MARZILLI, JOHN R.
10/15/2004	4377	2901	Q I	230,000	RIVER VALLEY

PICTURE

LISTING HISTORY

01/14/14	KCM
05/14/10	KCM
03/07/05	BW X
04/06/04	SH X

NOTES

1ST FLOOR FRAME ONLY, CHECK 2005 ADJUSTR AMENITIES COND WHEN FINISHED, 3/05 EST UNIT 100%-BW

EXTRA FEATURES VALUATION

Feature Type	Units	Lngth x Width	Size Adj	Rate	Cond	Market Value	Notes
FIREPLACE GAS	1		100	2,500.00	100	2,500	
ASH DR, CONDOS	1		100	32,000.00	100	32,000	
						34,500	

MUNICIPAL SOFTWARE BY AVITAR.

KINGSTON ASSESSING OFFICE

PARCEL TOTAL TAXABLE VALUE

Year	Building	Features	Land
2014	$ 134,900	$ 34,500	$ 0
		Parcel Total: $ 169,400	
2015	$ 134,900	$ 34,500	$ 0
		Parcel Total: $ 169,400	
2016	**$ 134,900**	**$ 34,500**	**$ 0**
		Parcel Total: $ 169,400	

LAND VALUATION

Zone: RRAQ RR W/AQUIFER **Minimum Acreage:** 3.00 **Minimum Frontage:** 200 **Site:** **Driveway:** **Road:**

Land Type	Units	Base Rate	NC	Adj	Site	Road	DWay	Topography	Cond	Ad Valorem	SPI	R	Tax Value	Notes
1F RES	0		E											
	0 ac													

Map: 000R16 **Lot: 000005** **Sub: 005-21** **Card: 1 of 1** **31 ASH DR** **KINGSTON** **Printed: 08/02/2016**

PICTURE

OWNER

BLOWERS, FLOYD H
BLOWERS, ELENA
31 ASH DRIVE

KINGSTON, NH 03848

TAXABLE DISTRICTS

District	Percentage

PERMITS

Date	Permit ID	Permit Type	Notes
11/01/03	R16-5-5-21	BUILDING	CONDOMINIUM UNIT #21

BUILDING DETAILS

Model: **1.50 STORY FRAME TOWNHOUSE**
Roof: **GABLE HIP/ASPHALT**
Ext: **VINYL SIDING**
Int: **DRYWALL**
Floor: **CARPET/HARDWOOD**
Heat: **GAS/FA DUCTED**
Bedrooms: **1** Baths: **2.0** Fixtures:
Extra Kitchens: Fireplaces:
A/C: **Yes 100.00 %** Generators:
Quality: **A0 AVG**
Com. Wall:
Size Adj: **1.0281** Base Rate: **RCT 84.00**
Bldg. Rate: **1.0075**
Sq. Foot Cost: **$ 84.63**

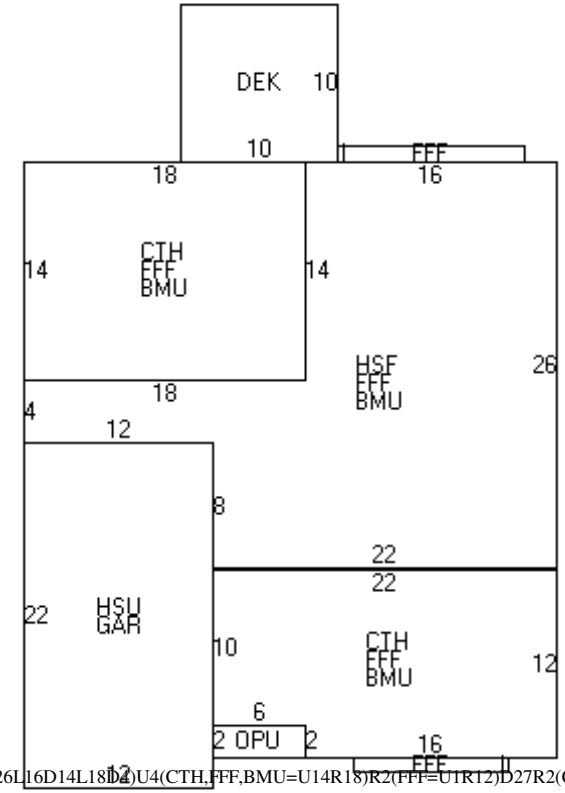

(HSU,GAR=L12U22)(HSF,FFF,BMU=R12D8R22U26L16D14L18D4)U4(CTH,FFF,BMU=U14R18)R2(FFF=U1R12)D27R2(CTH,FFF,BMU=D12L16IU2L6U10R22)D12L3(FFF=D1L10)U1L3(OPU=L6U2)U36L2(DEK=R10U10)

BUILDING SUB AREA DETAILS

ID	Description	Area	Adj.	Effect.
HSU	1/2 STRY UNFIN	264	0.25	66
GAR	GARAGE	264	0.45	119
HSF	1/2 STRY FIN	536	0.50	268
FFF	FST FLR FIN	1062	1.00	1062
BMU	BSMNT	1040	0.15	156
CTH	CATHEDRAL	504	0.10	50
OPU	OPEN PORCH	12	0.15	2
DEK	DECK/ENTRANCE	100	0.10	10
GLA:	**1,330**	**3,782**		**1,733**

2013 BASE YEAR BUILDING VALUATION

Market Cost New:		**$ 146,664**
Year Built:		**2004**
Condition For Age:	AVERAGE	**8 %**
Physical:		
Functional:		
Economic:		
Temporary:		
Total Depreciation:		**8 %**
Building Value:		**$ 134,900**

OWNER INFORMATION

CARTER, EDWARD J., JR.
CARTER, LYNNE A.
19 ASH DRIVE

KINGSTON, NH 03848

SALES HISTORY

Date	Book	Page	Type	Price	Grantor
05/31/2013	5444	1818	Q I	186,900	PERKINS, JOANNE S.
03/18/2009	4990	1992	Q I	195,000	SHARKEY, DAVID N., TR
02/09/2007	4764	2571	U I 38		SHARKEY
06/01/2005	4489	0190	Q I	236,400	RIVER VALLEY DEV.

PICTURE

LISTING HISTORY

01/14/14	KCM
08/14/13	FS M
05/13/10	KCM
03/24/06	JARX
03/07/05	BW O
04/06/04	SH X

NOTES

FNDT. ONLY CHECK 2005. ADJUST AMENITES COND WHEN FINISHED, 2/05 UNIT 88% FIN CHK 06-BW 03/06 HSE 100% JAR. D-30670.

EXTRA FEATURES VALUATION

Feature Type	Units	Lngth x Width	Size Adj	Rate	Cond	Market Value	Notes
FIREPLACE GAS	1		100	2,500.00	100	2,500	
ASH DR, CONDOS	1		100	32,000.00	100	32,000	
						34,500	

MUNICIPAL SOFTWARE BY AVITAR

KINGSTON ASSESSING OFFICE

PARCEL TOTAL TAXABLE VALUE

Year	Building	Features	Land
2014	$ 134,900	$ 34,500	$ 0
		Parcel Total: $ 169,400	
2015	$ 134,900	$ 34,500	$ 0
		Parcel Total: $ 169,400	
2016	**$ 134,900**	**$ 34,500**	**$ 0**
		Parcel Total: $ 169,400	

LAND VALUATION

Zone: RRAQ RR W/AQUIFER **Minimum Acreage:** 3.00 **Minimum Frontage:** 200 **Site:** **Driveway:** **Road:**

Land Type	Units	Base Rate	NC	Adj	Site	Road	DWay	Topography	Cond	Ad Valorem	SPI	R	Tax Value	Notes
1F RES	0		E											
	0 ac													

PICTURE

OWNER

CARTER, EDWARD J., JR.
CARTER, LYNNE A.
19 ASH DRIVE

KINGSTON, NH 03848

TAXABLE DISTRICTS

District	Percentage

PERMITS

Date	Permit ID	Permit Type	Notes
11/01/03	R16-5-5-22	BUILDING	CONDOMINIUM UNIT #22

BUILDING DETAILS

Model: **1.50 STORY FRAME TOWNHOUSE**
Roof: **GABLE HIP/ASPHALT**
Ext: **VINYL SIDING**
Int: **DRYWALL**
Floor: **CARPET/HARDWOOD**
Heat: **GAS/FA DUCTED**
Bedrooms: **1** Baths: **2.0** Fixtures:
Extra Kitchens: Fireplaces:
A/C: **Yes 100.00 %** Generators:
Quality: **A0 AVG**
Com. Wall:
Size Adj: **1.0281** Base Rate: **RCT 84.00**
Bldg. Rate: **1.0075**
Sq. Foot Cost: **$ 84.63**

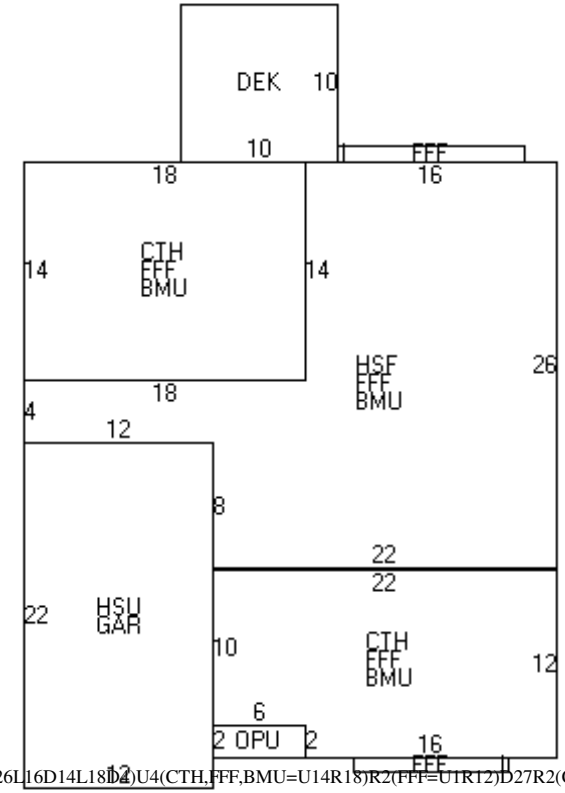

(HSU,GAR=L12U22)(HSF,FFF,BMU=R12D8R22U26L16D14L18D4)U4(CTH,FFF,BMU=U14R18)R2(FFF=U1R12)D27R2(CTH,FFF,BMU=D12L16IU2L6U10R22)D12L3(FFF=D1L10)U1L3(OPU=L6U2)U36L2(DEK=R10U10)

BUILDING SUB AREA DETAILS

ID	Description	Area	Adj.	Effect.
DEK	DECK/ENTRANCE	100	0.10	10
HSU	1/2 STRY UNFIN	264	0.25	66
GAR	GARAGE	264	0.45	119
HSF	1/2 STRY FIN	536	0.50	268
FFF	FST FLR FIN	1062	1.00	1062
BMU	BSMNT	1040	0.15	156
CTH	CATHEDRAL	504	0.10	50
OPU	OPEN PORCH	12	0.15	2
GLA:	**1,330**	**3,782**		**1,733**

2013 BASE YEAR BUILDING VALUATION

Market Cost New:		**$ 146,664**
Year Built:		**2004**
Condition For Age:	AVERAGE	**8 %**
Physical:		
Functional:		
Economic:		
Temporary:		
Total Depreciation:		**8 %**
Building Value:		**$ 134,900**

OWNER INFORMATION

CLEARY, BARBARA - TR
ASH TWENTY-ONE REALTY TRUST
21 ASH DRIVE

KINGSTON, NH 03848-3350

SALES HISTORY

Date	Book	Page	Type	Price	Grantor
05/31/2016	5719	772	Q I	200,000	BLINN, PATRICIA A., TR
04/19/2006	4643	2797	U I 38		BLINN
09/23/2004	4366	990	Q I	224,933	RIVER VALLEY

PICTURE

LISTING HISTORY

01/14/14 KCM
05/13/10 KCML
03/07/05 BW X
04/06/04 SH X

NOTES

FNDT. ONLY CHECK 2005. ADJ AMENITES COND WHEN FINISHED, 3/05 EST UNIT 100%-BW

EXTRA FEATURES VALUATION

Feature Type	Units	Lngth x Width	Size Adj	Rate	Cond	Market Value	Notes
FIREPLACE GAS	1		100	2,500.00	100	2,500	
ASH DR, CONDOS	1		100	32,000.00	100	32,000	
						34,500	

MUNICIPAL SOFTWARE BY AVITAR

KINGSTON ASSESSING OFFICE

PARCEL TOTAL TAXABLE VALUE

Year	Building	Features	Land
2014	$ 134,900	$ 34,500	$ 0
		Parcel Total: $ 169,400	
2015	$ 134,900	$ 34,500	$ 0
		Parcel Total: $ 169,400	
2016	**$ 134,900**	**$ 34,500**	**$ 0**
		Parcel Total: $ 169,400	

LAND VALUATION

Zone: RRAQ RR W/AQUIFER **Minimum Acreage:** 3.00 **Minimum Frontage:** 200 **Site:** **Driveway:** **Road:**

Land Type	Units	Base Rate	NC	Adj	Site	Road	DWay	Topography	Cond	Ad Valorem	SPI	R	Tax Value	Notes
1F RES	0		E											
	0 ac													

PICTURE

OWNER

CLEARY, BARBARA - TR
ASH TWENTY-ONE REALTY TRUST
21 ASH DRIVE

KINGSTON, NH 03848-3350

TAXABLE DISTRICTS

District	Percentage

PERMITS

Date	Permit ID	Permit Type	Notes
11/01/03	R16-5-5-23	BUILDING	CONDOMINIUM UNIT #23

BUILDING DETAILS

Model: **1.50 STORY FRAME TOWNHOUSE**
Roof: **GABLE HIP/ASPHALT**
Ext: **VINYL SIDING**
Int: **DRYWALL**
Floor: **CARPET/HARDWOOD**
Heat: **GAS/FA DUCTED**
Bedrooms: **1** Baths: **2.0** Fixtures:
Extra Kitchens: Fireplaces:
A/C: **Yes 100.00 %** Generators:
Quality: **A0 AVG**
Com. Wall:
Size Adj: **1.0281** Base Rate: **RCT 84.00**
Bldg. Rate: **1.0075**
Sq. Foot Cost: **$ 84.63**

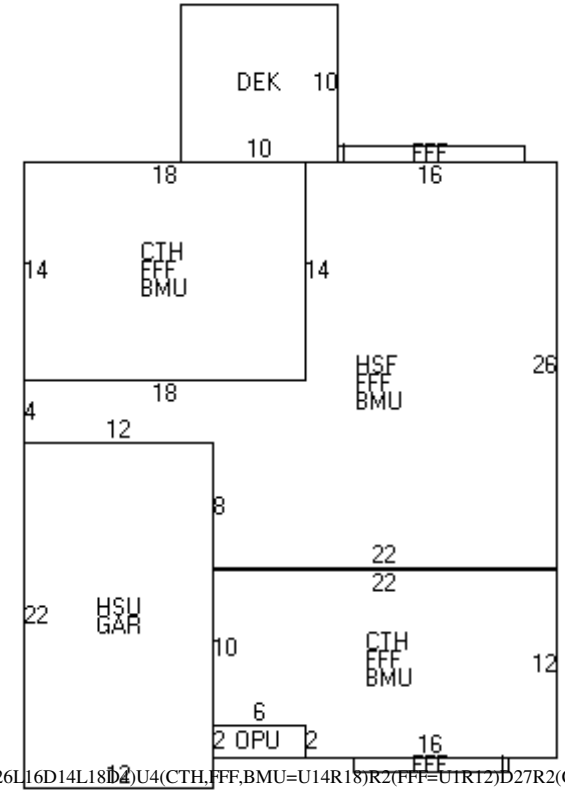

(HSU,GAR=L12U22)(HSF,FFF,BMU=R12D8R22U26L16D14L18D4)U4(CTH,FFF,BMU=U14R18)R2(FFF=U1R12)D27R2(CTH,FFF,BMU=D12L16IU2L6U10R22)D12L3(FFF=D1L10)U1L3(OPU=L6U2)U36L2(DEK=R10U10)

BUILDING SUB AREA DETAILS

ID	Description	Area	Adj.	Effect.
DEK	DECK/ENTRANCE	100	0.10	10
HSU	1/2 STRY UNFIN	264	0.25	66
GAR	GARAGE	264	0.45	119
HSF	1/2 STRY FIN	536	0.50	268
FFF	FST FLR FIN	1062	1.00	1062
BMU	BSMNT	1040	0.15	156
CTH	CATHEDRAL	504	0.10	50
OPU	OPEN PORCH	12	0.15	2
GLA:	**1,330**	**3,782**		**1,733**

2013 BASE YEAR BUILDING VALUATION

Market Cost New:		**$ 146,664**
Year Built:		**2004**
Condition For Age:	AVERAGE	**8 %**
Physical:		
Functional:		
Economic:		
Temporary:		
Total Depreciation:		**8 %**
Building Value:		**$ 134,900**

OWNER INFORMATION

MCKEW, HOWARD J-TRST.
MCKEW REALTY TRUST OF 2012
23 ASH DRIVE

KINGSTON, NH 03848

SALES HISTORY

Date	Book	Page	Type	Price	Grantor
10/12/2012	5366	1195	U I 38		MCKEW, HOWARD J.
08/31/2012	5351	0968	Q I	164,000	WALES, JOSEPH W.
09/22/2004	4365	2267	Q I	225,000	RIVER VALLEY

PICTURE

LISTING HISTORY

01/14/14	KCM
04/23/13	KC M
05/13/10	KCML
03/07/05	BW X
04/06/04	SH X

NOTES

FNDT. ONLY CHECK 2005. ADJ AMENITES COND WHEN FINISHED, 3/05 EST UNIT 100%-BW

EXTRA FEATURES VALUATION

Feature Type	Units	Lngth x Width	Size Adj	Rate	Cond	Market Value	Notes
FIREPLACE GAS	1		100	2,500.00	100	2,500	
ASH DR, CONDOS	1		100	32,000.00	100	32,000	
						34,500	

MUNICIPAL SOFTWARE BY AVITAR

KINGSTON ASSESSING OFFICE

PARCEL TOTAL TAXABLE VALUE

Year	Building	Features	Land
2014	$ 135,400	$ 34,500	$ 0
		Parcel Total: $ 169,900	
2015	$ 135,400	$ 34,500	$ 0
		Parcel Total: $ 169,900	
2016	**$ 135,400**	**$ 34,500**	**$ 0**
		Parcel Total: $ 169,900	

LAND VALUATION

Zone: RRAQ RR W/AQUIFER **Minimum Acreage:** 3.00 **Minimum Frontage:** 200 **Site:** **Driveway:** **Road:**

Land Type	Units	Base Rate	NC	Adj	Site	Road	DWay	Topography	Cond	Ad Valorem	SPI	R	Tax Value	Notes
1F RES	0		E											
	0 ac													

Map: 000R16 **Lot: 000005** **Sub: 005-24** **Card: 1 of 1** **23 ASH DR** **KINGSTON** **Printed: 08/02/2016**

PICTURE

OWNER

MCKEW, HOWARD J-TRST.
MCKEW REALTY TRUST OF 2012
23 ASH DRIVE

KINGSTON, NH 03848

TAXABLE DISTRICTS

District	Percentage

PERMITS

Date	Permit ID	Permit Type	Notes
11/01/03	R16-5-5-24	BUILDING	CONDOMINIUM UNIT #24

BUILDING DETAILS

Model: **1.50 STORY FRAME TOWNHOUSE**
Roof: **GABLE HIP/ASPHALT**
Ext: **VINYL SIDING**
Int: **DRYWALL**
Floor: **CARPET/HARDWOOD**
Heat: **GAS/FA DUCTED**
Bedrooms: **1** Baths: **2.0** Fixtures:
Extra Kitchens: Fireplaces:
A/C: **Yes 100.00 %** Generators:
Quality: **A0 AVG**
Com. Wall:
Size Adj: **1.0269** Base Rate: **RCT 84.00**
Bldg. Rate: **1.0064**
Sq. Foot Cost: **$ 84.53**

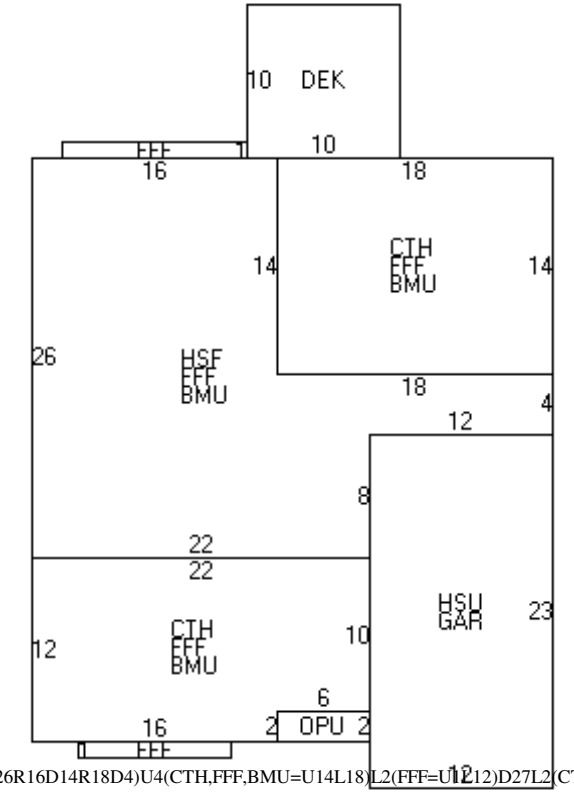

(HSU,GAR=R12U23)(HSF,FFF,BMU=L12D8L22U26R16D14R18D4)U4(CTH,FFF,BMU=U14L18)L2(FFF=U12R12)D27L2(CTH,FFF,BMU=D12R16IU2R6U10L22)D12R3(FFF=D1R10)U1R3(OPU=R6U2)U36R2(DEK=L10U10)

BUILDING SUB AREA DETAILS

ID	Description	Area	Adj.	Effect.
DEK	DECK/ENTRANCE	100	0.10	10
HSU	1/2 STRY UNFIN	276	0.25	69
GAR	GARAGE	276	0.45	124
HSF	1/2 STRY FIN	536	0.50	268
FFF	FST FLR FIN	1062	1.00	1062
BMU	BSMNT	1040	0.15	156
CTH	CATHEDRAL	504	0.10	50
OPU	OPEN PORCH	12	0.15	2
GLA:	**1,330**	**3,806**		**1,741**

2013 BASE YEAR BUILDING VALUATION

Market Cost New:		**$ 147,167**
Year Built:		**2004**
Condition For Age:	AVERAGE	**8 %**
Physical:		
Functional:		
Economic:		
Temporary:		
Total Depreciation:		**8 %**
Building Value:		**$ 135,400**

OWNER INFORMATION

BOUSQUET, CHERYL A
SANTOS, GERTRUDE - LE
C/O GERTRUDE SANTOS
25 ASH DRIVE
KINGSTON, NH 03848

SALES HISTORY

Date	Book	Page	Type	Price	Grantor
07/30/2014	5549	0897	U I 38		SANTOS, GERTRUDE A.
09/14/2012	5356	0061	Q I	173,000	DIGENNARO, CONRAD M.&P
04/09/2007	4785	2035	U I 38		DIGENARRO
09/15/2004	4362	801	Q I	229,933	RIVER VALLEY

PICTURE

LISTING HISTORY

01/14/14	KCM	
04/23/13	KC M	
05/14/10	KCML	CYCLICAL
03/07/05	BW X	EST UNIT 100%
04/06/04	SH X	FNDT. ONLY CHECK 2005; A

NOTES

EXTRA FEATURES VALUATION

Feature Type	Units	Lngth x Width	Size Adj	Rate	Cond	Market Value	Notes
FIREPLACE GAS	1		100	2,500.00	100	2,500	
ASH DR, CONDOS	1		100	32,000.00	100	32,000	
						34,500	

MUNICIPAL SOFTWARE BY AVITAR.

KINGSTON ASSESSING OFFICE

PARCEL TOTAL TAXABLE VALUE

Year	Building	Features	Land
2014	$ 134,900	$ 34,500	$ 0
		Parcel Total: $ 169,400	
2015	$ 134,900	$ 34,500	$ 0
		Parcel Total: $ 169,400	
2016	**$ 134,900**	**$ 34,500**	**$ 0**
		Parcel Total: $ 169,400	

LAND VALUATION

Zone: RRAQ RR W/AQUIFER **Minimum Acreage:** 3.00 **Minimum Frontage:** 200 **Site:** **Driveway:** **Road:**

Land Type	Units	Base Rate	NC	Adj	Site	Road	DWay	Topography	Cond	Ad Valorem	SPI	R	Tax Value	Notes
1F RES	0		E											
	0 ac													

Map: 000R16 **Lot: 000005** **Sub: 005-25** **Card: 1 of 1** **25 ASH DR** **KINGSTON** **Printed: 08/02/2016**

PICTURE

OWNER

BOUSQUET, CHERYL A
SANTOS, GERTRUDE - LE
C/O GERTRUDE SANTOS
25 ASH DRIVE
KINGSTON, NH 03848

TAXABLE DISTRICTS

District	Percentage

PERMITS

Date	Permit ID	Permit Type	Notes
11/01/03	R16-5-5-25	BUILDING	CONDOMINIUM UNIT #25

BUILDING DETAILS

Model: **1.50 STORY FRAME TOWNHOUSE**
Roof: **GABLE HIP/ASPHALT**
Ext: **VINYL SIDING**
Int: **DRYWALL**
Floor: **CARPET/HARDWOOD**
Heat: **GAS/FA DUCTED**
Bedrooms: **1** Baths: **2.0** Fixtures:
Extra Kitchens: Fireplaces:
A/C: **Yes 100.00 %** Generators:
Quality: **A0 AVG**
Com. Wall:
Size Adj: **1.0281** Base Rate: **RCT 84.00**
Bldg. Rate: **1.0075**
Sq. Foot Cost: **$ 84.63**

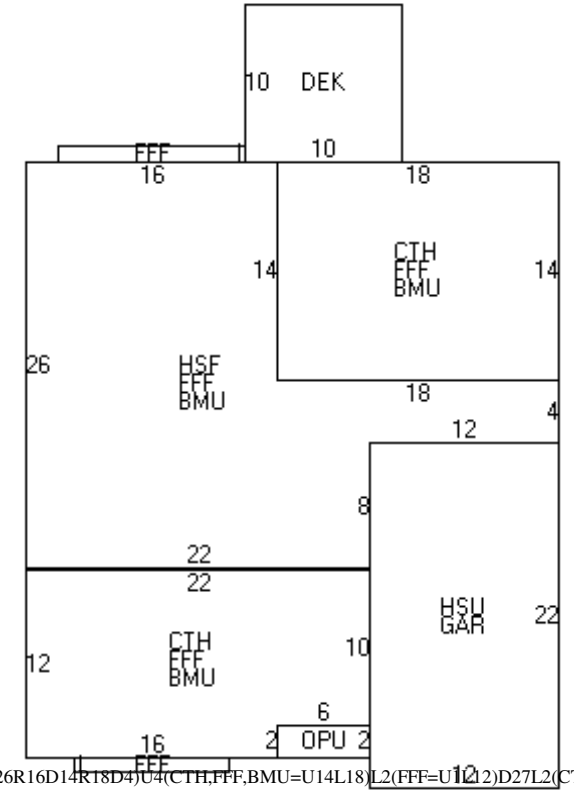

(HSU,GAR=R12U22)(HSF,FFF,BMU=L12D8L22U26R16D14R18D4)U4(CTH,FFF,BMU=U14L18)L2(FFF=U12)D27L2(CTH,FFF,BMU=D12R16IU2R6U10L22)D12R3(FFF=D1R10)U1R3(OPU=R6U2)U36R2(DEK=L10U10)

BUILDING SUB AREA DETAILS

ID	Description	Area	Adj.	Effect.
HSU	1/2 STRY UNFIN	264	0.25	66
GAR	GARAGE	264	0.45	119
HSF	1/2 STRY FIN	536	0.50	268
FFF	FST FLR FIN	1062	1.00	1062
BMU	BSMNT	1040	0.15	156
CTH	CATHEDRAL	504	0.10	50
OPU	OPEN PORCH	12	0.15	2
DEK	DECK/ENTRANCE	100	0.10	10
GLA:	**1,330**	**3,782**		**1,733**

2013 BASE YEAR BUILDING VALUATION

Market Cost New:		**$ 146,664**
Year Built:		**2004**
Condition For Age:	AVERAGE	**8 %**
Physical:		
Functional:		
Economic:		
Temporary:		
Total Depreciation:		**8 %**
Building Value:		**$ 134,900**

OWNER INFORMATION

GREEN, DENISE

29 ASH DRIVE

KINGSTON, NH 03848

SALES HISTORY

Date	Book	Page	Type	Price	Grantor
06/03/2005	4491	2444	Q I	250,000	RIVER VALLEY DEV.

PICTURE

LISTING HISTORY

01/15/14	KCM
05/14/10	KCM
03/24/06	JARX
03/07/05	BW O
04/06/04	SH V

NOTES

CHECK 2005, 2/05 UNIT 83% FIN CHK 06-BW 03/06 HSE 100% JAR

EXTRA FEATURES VALUATION

Feature Type	Units	Lngth x Width	Size Adj	Rate	Cond	Market Value	Notes
FIREPLACE GAS	1		100	2,500.00	100	2,500	
ASH DR, CONDOS	1		100	32,000.00	100	32,000	
						34,500	

MUNICIPAL SOFTWARE BY AVITAR

KINGSTON ASSESSING OFFICE

PARCEL TOTAL TAXABLE VALUE

Year	Building	Features	Land
2014	$ 135,400	$ 34,500	$ 0
		Parcel Total: $ 169,900	
2015	$ 135,400	$ 34,500	$ 0
		Parcel Total: $ 169,900	
2016	**$ 135,400**	**$ 34,500**	**$ 0**
		Parcel Total: $ 169,900	

LAND VALUATION

Zone: RRAQ RR W/AQUIFER **Minimum Acreage:** 3.00 **Minimum Frontage:** 200 **Site:** **Driveway:** **Road:**

Land Type	Units	Base Rate	NC	Adj	Site	Road	DWay	Topography	Cond	Ad Valorem	SPI	R	Tax Value	Notes
1F RES	0		E											
	0 ac													

Map: 000R16 **Lot: 000005** **Sub: 005-26** **Card: 1 of 1** **29 ASH DR** **KINGSTON** **Printed: 08/02/2016**

PICTURE

OWNER

GREEN, DENISE

29 ASH DRIVE

KINGSTON, NH 03848

TAXABLE DISTRICTS

District	Percentage

PERMITS

Date	Permit ID	Permit Type	Notes
11/01/03	R16-5-5-26	BUILDING	CONDOMINIUM UNIT #26

BUILDING DETAILS

Model: **1.50 STORY FRAME TOWNHOUSE**
Roof: **GABLE HIP/ASPHALT**
Ext: **VINYL SIDING**
Int: **DRYWALL**
Floor: **CARPET/HARDWOOD**
Heat: **GAS/FA DUCTED**
Bedrooms: **1** Baths: **2.0** Fixtures:
Extra Kitchens: Fireplaces:
A/C: **Yes 100.00 %** Generators:
Quality: **A0 AVG**
Com. Wall:
Size Adj: **1.0269** Base Rate: **RCT 84.00**
Bldg. Rate: **1.0064**
Sq. Foot Cost: **$ 84.53**

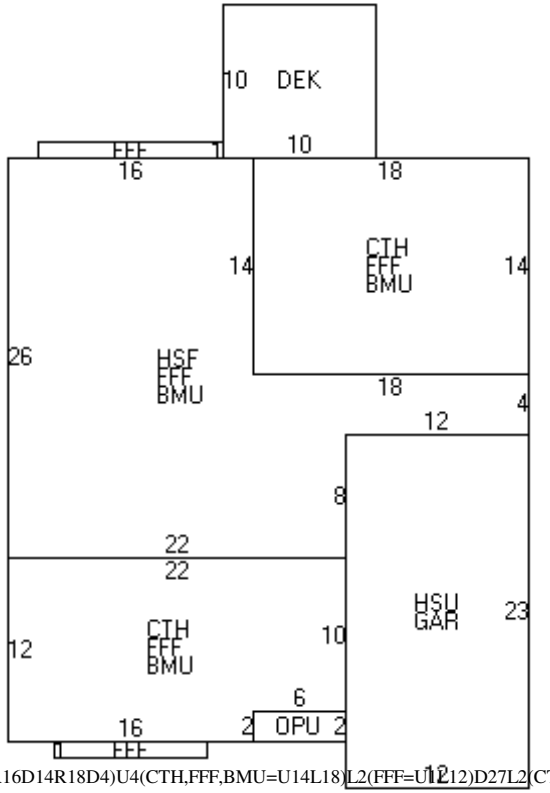

(HSU,GAR=R12U23)(HSF,FFF,BMU=L12D8L22U26R16D14R18D4)U4(CTH,FFF,BMU=U14L18)L2(FFF=U12R12)D27L2(CTH,FFF,BMU=D12R16IU2R6U10L22)D12R3(FFF=D1R10)U1R3(OPU=R6U2)U36R2(DEK=L10U10)

BUILDING SUB AREA DETAILS

ID	Description	Area	Adj.	Effect.
HSU	1/2 STRY UNFIN	276	0.25	69
GAR	GARAGE	276	0.45	124
HSF	1/2 STRY FIN	536	0.50	268
FFF	FST FLR FIN	1062	1.00	1062
BMU	BSMNT	1040	0.15	156
CTH	CATHEDRAL	504	0.10	50
OPU	OPEN PORCH	12	0.15	2
DEK	DECK/ENTRANCE	100	0.10	10
GLA:	**1,330**	**3,806**		**1,741**

2013 BASE YEAR BUILDING VALUATION

Market Cost New:		**$ 147,167**
Year Built:		**2004**
Condition For Age:	AVERAGE	**8 %**
Physical:		
Functional:		
Economic:		
Temporary:		
Total Depreciation:		**8 %**
Building Value:		**$ 135,400**

OWNER INFORMATION

SOWICK, JOHN
SOWICK, CAROL
27 ASH DRIVE

KINGSTON, NH 03848

SALES HISTORY

Date	Book	Page	Type	Price	Grantor
10/28/2014	5570	2057	Q I	190,000	WRIGHT, BETSY
06/20/2008	4928	0795	U I 37	175,000	LASALLE BANK
02/22/2008	4888	2498	U I 51	200,600	EVANS, REESE
10/08/2004	4375	438	Q I	239,900	RIVER VALLEY

PICTURE

LISTING HISTORY

01/14/14	KCM	
05/14/10	KCM	
03/07/05	BW O	UNIT 100%, HW FLR ONLY IN
04/06/04	SH V	

NOTES

D-30670,

EXTRA FEATURES VALUATION

Feature Type	Units	Lngth x Width	Size Adj	Rate	Cond	Market Value	Notes
FIREPLACE GAS	1		100	2,500.00	100	2,500	
ASH DR, CONDOS	1		100	32,000.00	100	32,000	
						34,500	

MUNICIPAL SOFTWARE BY AVITAR.

KINGSTON ASSESSING OFFICE

PARCEL TOTAL TAXABLE VALUE

Year	Building	Features	Land
2014	$ 134,900	$ 34,500	$ 0
		Parcel Total: $ 169,400	
2015	$ 134,900	$ 34,500	$ 0
		Parcel Total: $ 169,400	
2016	**$ 134,900**	**$ 34,500**	**$ 0**
		Parcel Total: $ 169,400	

LAND VALUATION

Zone: RRAQ RR W/AQUIFER **Minimum Acreage:** 3.00 **Minimum Frontage:** 200 **Site:** **Driveway:** **Road:**

Land Type	Units	Base Rate	NC	Adj	Site	Road	DWay	Topography	Cond	Ad Valorem	SPI	R	Tax Value	Notes
1F RES	0		E											
	0 ac													

PICTURE

OWNER

SOWICK, JOHN
SOWICK, CAROL
27 ASH DRIVE

KINGSTON, NH 03848

TAXABLE DISTRICTS

District	Percentage

PERMITS

Date	Permit ID	Permit Type	Notes
11/01/03	r16-5-5-27	BUILDING	CONDOMINIUM UNIT #27

BUILDING DETAILS

Model: **1.50 STORY FRAME TOWNHOUSE**
Roof: **GABLE HIP/ASPHALT**
Ext: **VINYL SIDING**
Int: **DRYWALL**
Floor: **CARPET**
Heat: **GAS/FA DUCTED**
Bedrooms: **1** Baths: **2.0** Fixtures:
Extra Kitchens: Fireplaces:
A/C: **Yes 100.00 %** Generators:
Quality: **A0 AVG**
Com. Wall:
Size Adj: **1.0281** Base Rate: **RCT 84.00**
Bldg. Rate: **1.0075**
Sq. Foot Cost: **$ 84.63**

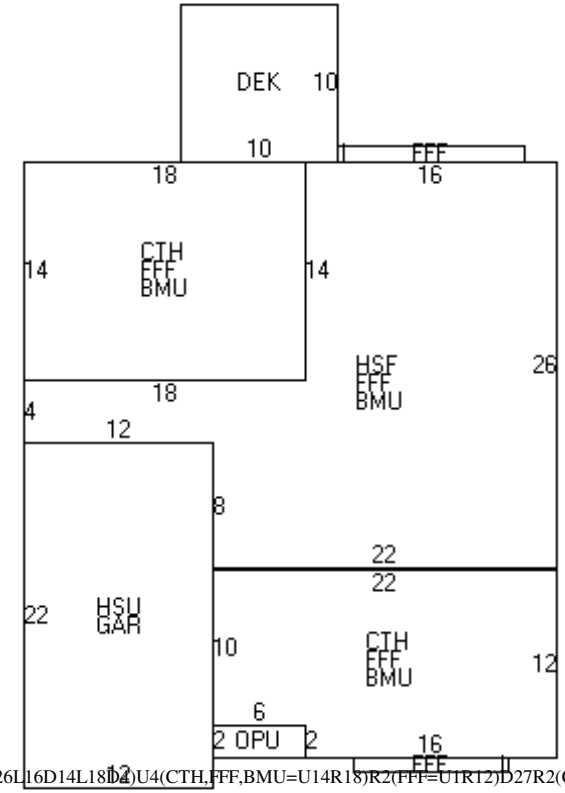

(HSU,GAR=L12U22)(HSF,FFF,BMU=R12D8R22U26L16D14L18D4)U4(CTH,FFF,BMU=U14R18)R2(FFF=U1R12)D27R2(CTH,FFF,BMU=D12L16IU2L6U10R22)D12L3(FFF=D1L10)U1L3(OPU=L6U2)U36L2(DEK=R10U10)

BUILDING SUB AREA DETAILS

ID	Description	Area	Adj.	Effect.
HSU	1/2 STRY UNFIN	264	0.25	66
GAR	GARAGE	264	0.45	119
HSF	1/2 STRY FIN	536	0.50	268
FFF	FST FLR FIN	1062	1.00	1062
BMU	BSMNT	1040	0.15	156
CTH	CATHEDRAL	504	0.10	50
OPU	OPEN PORCH	12	0.15	2
DEK	DECK/ENTRANCE	100	0.10	10
GLA:	**1,330**	**3,782**		**1,733**

2013 BASE YEAR BUILDING VALUATION

Market Cost New:		**$ 146,664**
Year Built:		**2004**
Condition For Age:	AVERAGE	**8 %**
Physical:		
Functional:		
Economic:		
Temporary:		
Total Depreciation:		**8 %**
Building Value:		**$ 134,900**

OWNER INFORMATION

SARRATORA, JOSEPH D
SARRATORA, PATRICIA L
28 ASH DRIVE

KINGSTON, NH 03848-3350

SALES HISTORY

Date	Book	Page	Type	Price	Grantor
06/16/2005	4496	2958	Q I	250,000	RIVER VALLEY DEV.

PICTURE

LISTING HISTORY

01/13/14	KCM
05/13/10	KCML
03/24/06	JARX
03/07/05	BW O
04/06/04	SH V

NOTES

CHECK 2005, 2/05 UNIT 70% FIN CHK 06-BW ,03/06 HSE 100% JAR

EXTRA FEATURES VALUATION

Feature Type	Units	Lngth x Width	Size Adj	Rate	Cond	Market Value	Notes
FIREPLACE GAS	1		100	2,500.00	100	2,500	
ASH DR, CONDOS	1		100	32,000.00	100	32,000	
						34,500	

MUNICIPAL SOFTWARE BY AVITAR

KINGSTON ASSESSING OFFICE

PARCEL TOTAL TAXABLE VALUE

Year	Building	Features	Land
2014	$ 135,400	$ 34,500	$ 0
		Parcel Total: $ 169,900	
2015	$ 135,400	$ 34,500	$ 0
		Parcel Total: $ 169,900	
2016	**$ 135,400**	**$ 34,500**	**$ 0**
		Parcel Total: $ 169,900	

LAND VALUATION

Zone: RRAQ RR W/AQUIFER **Minimum Acreage:** 3.00 **Minimum Frontage:** 200 **Site:** **Driveway:** **Road:**

Land Type	Units	Base Rate	NC	Adj	Site	Road	DWay	Topography	Cond	Ad Valorem	SPI	R	Tax Value	Notes
1F RES	0		E											
	0 ac													

PICTURE

OWNER

SARRATORA, JOSEPH D
SARRATORA, PATRICIA L
28 ASH DRIVE

KINGSTON, NH 03848-3350

TAXABLE DISTRICTS

District	Percentage

PERMITS

Date	Permit ID	Permit Type	Notes
11/01/03	R16-5-5-28	BUILDING	CONDOMINIUM UNIT #28

BUILDING DETAILS

Model: **1.50 STORY FRAME TOWNHOUSE**
Roof: **GABLE HIP/ASPHALT**
Ext: **VINYL SIDING**
Int: **DRYWALL**
Floor: **CARPET/HARDWOOD**
Heat: **GAS/FA DUCTED**
Bedrooms: **1** Baths: **2.0** Fixtures:
Extra Kitchens: Fireplaces:
A/C: **Yes 100.00 %** Generators:
Quality: **A0 AVG**
Com. Wall:
Size Adj: **1.0269** Base Rate: **RCT 84.00**
Bldg. Rate: **1.0064**
Sq. Foot Cost: **$ 84.53**

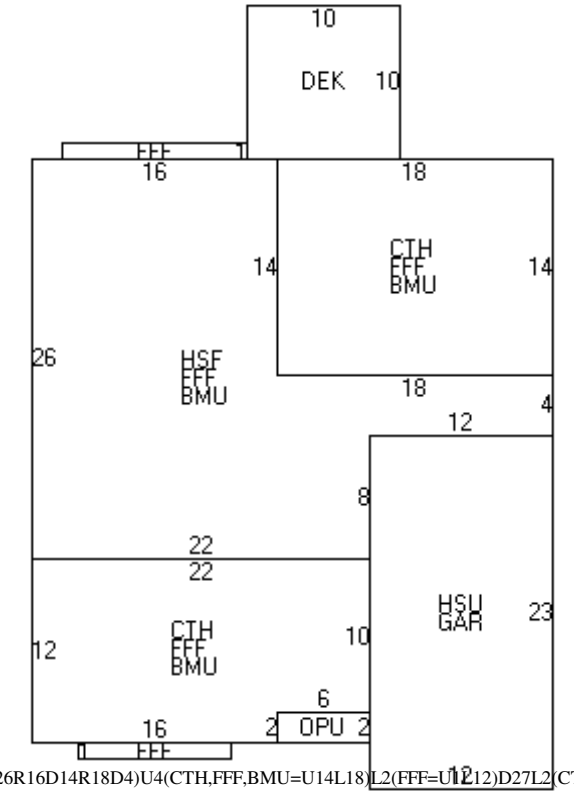

(HSU,GAR=R12U23)(HSF,FFF,BMU=L12D8L22U26R16D14R18D4)U4(CTH,FFF,BMU=U14L18)L2(FFF=U12L12)D27L2(CTH,FFF,BMU=D12R16IU2R6U10L22)D12R3(FFF=D1R10)U1R3(OPU=R6U2)U36R2(DEK=U10L10)

BUILDING SUB AREA DETAILS

ID	Description	Area	Adj.	Effect.
HSU	1/2 STRY UNFIN	276	0.25	69
GAR	GARAGE	276	0.45	124
HSF	1/2 STRY FIN	536	0.50	268
FFF	FST FLR FIN	1062	1.00	1062
BMU	BSMNT	1040	0.15	156
CTH	CATHEDRAL	504	0.10	50
OPU	OPEN PORCH	12	0.15	2
DEK	DECK/ENTRANCE	100	0.10	10
GLA:	**1,330**	**3,806**		**1,741**

2013 BASE YEAR BUILDING VALUATION

Market Cost New:		**$ 147,167**
Year Built:		**2004**
Condition For Age:	AVERAGE	**8 %**
Physical:		
Functional:		
Economic:		
Temporary:		
Total Depreciation:		**8 %**
Building Value:		**$ 135,400**

OWNER INFORMATION

PROVENCHER, DOUGLAS P
PROVENCHER, ELAINE M
30 ASH DRIVE

KINGSTON, NH 03848

SALES HISTORY

Date	Book	Page	Type	Price	Grantor
07/23/2014	5547	1611	Q I	208,250	GRACE, CHARLES K.
07/16/2009	5033	2263	Q I	404,000	CLARKE, CAROL-REVOCABL
11/04/2008	4960	2539	U I 38		CLARKE, CAROL
03/30/2005	4457	1514	Q I	244,933	RIVER VALLEY DEV.

PICTURE

LISTING HISTORY

01/13/14	KCM	
05/13/10	KCM	
03/24/06	JARX	HSE 100%
03/07/05	BW O	UNIT 70% FIN CHK 06
04/06/04	SH V	CK '06

NOTES

D-30670.

EXTRA FEATURES VALUATION

Feature Type	Units	Lngth x Width	Size Adj	Rate	Cond	Market Value	Notes
FIREPLACE GAS	1		100	2,500.00	100	2,500	
ASH DR, CONDOS	1		100	32,000.00	100	32,000	
						34,500	

MUNICIPAL SOFTWARE BY AVITAR

KINGSTON ASSESSING OFFICE

PARCEL TOTAL TAXABLE VALUE

Year	Building	Features	Land
2014	$ 135,200	$ 34,500	$ 0
		Parcel Total: $ 169,700	
2015	$ 135,200	$ 34,500	$ 0
		Parcel Total: $ 169,700	
2016	**$ 135,200**	**$ 34,500**	**$ 0**
		Parcel Total: $ 169,700	

LAND VALUATION

Zone: RRAQ RR W/AQUIFER **Minimum Acreage:** 3.00 **Minimum Frontage:** 200 **Site:** **Driveway:** **Road:**

Land Type	Units	Base Rate	NC	Adj	Site	Road	DWay	Topography	Cond	Ad Valorem	SPI	R	Tax Value	Notes
1F RES	0		E											
	0 ac													

PICTURE

OWNER

PROVENCHER, DOUGLAS P
PROVENCHER, ELAINE M
30 ASH DRIVE

KINGSTON, NH 03848

TAXABLE DISTRICTS

District	Percentage

PERMITS

Date	Permit ID	Permit Type	Notes
11/01/03	R16-5-5-29	BUILDING	CONDOMINIUM UNIT #29

BUILDING DETAILS

Model: **1.50 STORY FRAME TOWNHOUSE**
Roof: **GABLE HIP/ASPHALT**
Ext: **VINYL SIDING**
Int: **DRYWALL**
Floor: **CARPET/HARDWOOD**
Heat: **GAS/FA DUCTED**
Bedrooms: **1** Baths: **2.0** Fixtures:
Extra Kitchens: Fireplaces:
A/C: **Yes 100.00 %** Generators:
Quality: **A0 AVG**
Com. Wall:
Size Adj: **1.0275** Base Rate: **RCT 84.00**
Bldg. Rate: **1.0070**
Sq. Foot Cost: **$ 84.58**

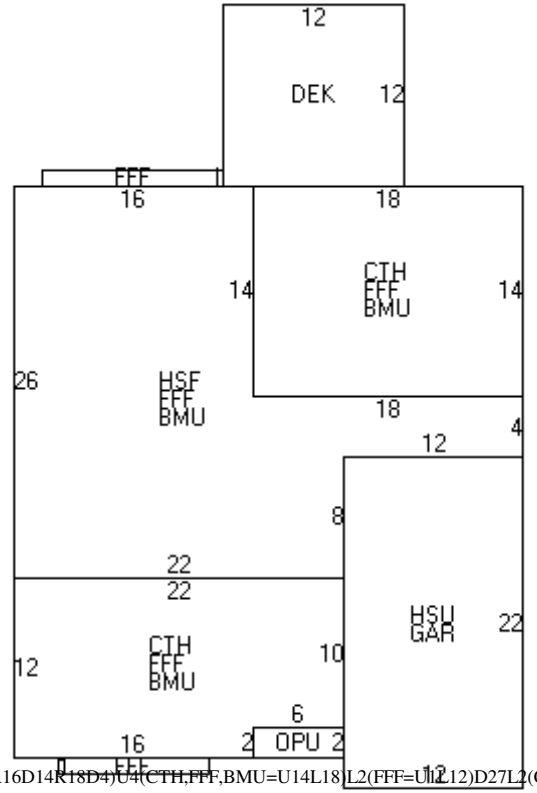

(HSU,GAR=R12U22)(HSF,FFF,BMU=L12D8L22U26R16D14R18D4)U4(CTH,FFF,BMU=U14L18)L2(FFF=U12L12)D27L2(CTH,FFF,BMU=D12R16IU2R6U10L22)D12R3(FFF=D1R10)U1R3(OPU=R6U2)U36R4(DEK=U12L12)

BUILDING SUB AREA DETAILS

ID	Description	Area	Adj.	Effect.
HSU	1/2 STRY UNFIN	264	0.25	66
GAR	GARAGE	264	0.45	119
HSF	1/2 STRY FIN	536	0.50	268
FFF	FST FLR FIN	1062	1.00	1062
BMU	BSMNT	1040	0.15	156
CTH	CATHEDRAL	504	0.10	50
OPU	OPEN PORCH	12	0.15	2
DEK	DECK/ENTRANCE	144	0.10	14
GLA:	**1,330**	**3,826**		**1,737**

2013 BASE YEAR BUILDING VALUATION

Market Cost New:		**$ 146,915**
Year Built:		**2004**
Condition For Age:	AVERAGE	**8 %**
Physical:		
Functional:		
Economic:		
Temporary:		
Total Depreciation:		**8 %**
Building Value:		**$ 135,200**

OWNER INFORMATION

FARRELL, DOROTHY A.

701 CHIPPEWA AVE

TAMPA, FL 33505-3942

SALES HISTORY

Date	Book	Page	Type	Price	Grantor
05/05/2005	4476	1224	Q I	249,933	RIVER VALLEY

PICTURE

LISTING HISTORY

01/13/14	KCM
05/13/10	KCM
05/24/06	JARX
03/07/05	BW O
04/06/04	SH V

NOTES

CHECK 2005, 3/05 UNIT 70% FIN CHK 06-BW 03/06 HSE 100% JAR

EXTRA FEATURES VALUATION

Feature Type	Units	Lngth x Width	Size Adj	Rate	Cond	Market Value	Notes
FIREPLACE GAS	1		100	2,500.00	100	2,500	
ASH DR, CONDOS	1		100	32,000.00	100	32,000	
						34,500	

MUNICIPAL SOFTWARE BY AVITAR

KINGSTON ASSESSING OFFICE

PARCEL TOTAL TAXABLE VALUE

Year	Building	Features	Land
2014	$ 135,400	$ 34,500	$ 0
		Parcel Total: $ 169,900	
2015	$ 135,400	$ 34,500	$ 0
		Parcel Total: $ 169,900	
2016	**$ 135,400**	**$ 34,500**	**$ 0**
		Parcel Total: $ 169,900	

LAND VALUATION

Zone: RRAQ RR W/AQUIFER **Minimum Acreage:** 3.00 **Minimum Frontage:** 200 **Site:** **Driveway:** **Road:**

Land Type	Units	Base Rate	NC	Adj	Site	Road	DWay	Topography	Cond	Ad Valorem	SPI	R	Tax Value	Notes
1F RES	0		E											
	0 ac													

Map: 000R16 **Lot: 000005** **Sub: 005-30** **Card: 1 of 1** **32 ASH DR** **KINGSTON** **Printed: 08/02/2016**

PICTURE

OWNER

FARRELL, DOROTHY A.

701 CHIPPEWA AVE

TAMPA, FL 33505-3942

TAXABLE DISTRICTS

District	Percentage

PERMITS

Date	Permit ID	Permit Type	Notes
11/01/03	R16-5-530	BUILDING	CONDOMINIUM UNIT #30

BUILDING DETAILS

Model: **1.50 STORY FRAME TOWNHOUSE**
Roof: **GABLE HIP/ASPHALT**
Ext: **VINYL SIDING**
Int: **DRYWALL**
Floor: **CARPET/HARDWOOD**
Heat: **GAS/FA DUCTED**
Bedrooms: **1** Baths: **2.0** Fixtures:
Extra Kitchens: Fireplaces:
A/C: **Yes 100.00 %** Generators:
Quality: **A0 AVG**
Com. Wall:
Size Adj: **1.0269** Base Rate: **RCT 84.00**
Bldg. Rate: **1.0064**
Sq. Foot Cost: **$ 84.53**

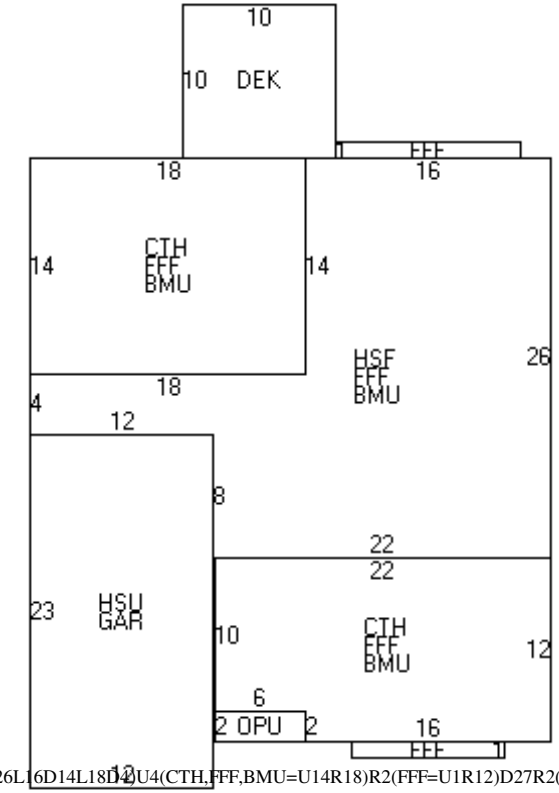

(HSU,GAR=L12U23)(HSF,FFF,BMU=R12D8R22U26L16D14L18D4U4(CTH,FFF,BMU=U14R18)R2(FFF=U1R12)D27R2(CTH,FFF,BMU=D12L16IU2L6U10R22)D12L3(FFF=D1L10)U1L3(OPU=L6U2)U36L2(DEK=U10R10)

BUILDING SUB AREA DETAILS

ID	Description	Area	Adj.	Effect.
HSU	1/2 STRY UNFIN	276	0.25	69
GAR	GARAGE	276	0.45	124
HSF	1/2 STRY FIN	536	0.50	268
FFF	FST FLR FIN	1062	1.00	1062
BMU	BSMNT	1040	0.15	156
CTH	CATHEDRAL	504	0.10	50
OPU	OPEN PORCH	12	0.15	2
DEK	DECK/ENTRANCE	100	0.10	10
GLA:	**1,330**	**3,806**		**1,741**

2013 BASE YEAR BUILDING VALUATION

Market Cost New:		**$ 147,167**
Year Built:		**2004**
Condition For Age:	AVERAGE	**8 %**
Physical:		
Functional:		
Economic:		
Temporary:		
Total Depreciation:		**8 %**
Building Value:		**$ 135,400**

OWNER INFORMATION

JALBERT, GERARD E.
JALBERT, PATRICIA A.
34 ASH DRIVE

KINGSTON, NH 03848-3350

SALES HISTORY

Date	Book	Page	Type	Price	Grantor
01/28/2005	4430	1870	Q I	249,933	RIVER VALLEY

PICTURE

LISTING HISTORY

01/14/14 KCM
05/13/10 KCM
03/07/05 BW X
04/06/04 SH V

NOTES

CHECK 2005, 3/05 EST UNIT 100%-BW,

EXTRA FEATURES VALUATION

Feature Type	Units	Lngth x Width	Size Adj	Rate	Cond	Market Value	Notes
FIREPLACE GAS	1		100	2,500.00	100	2,500	
ASH DR, CONDOS	1		100	32,000.00	100	32,000	
						34,500	

MUNICIPAL SOFTWARE BY AVITAR.

KINGSTON ASSESSING OFFICE

PARCEL TOTAL TAXABLE VALUE

Year	Building	Features	Land
2014	$ 135,400	$ 34,500	$ 0
		Parcel Total: $ 169,900	
2015	$ 135,400	$ 34,500	$ 0
		Parcel Total: $ 169,900	
2016	**$ 135,400**	**$ 34,500**	**$ 0**
		Parcel Total: $ 169,900	

LAND VALUATION

Zone: RRAQ RR W/AQUIFER **Minimum Acreage:** 3.00 **Minimum Frontage:** 200 **Site:** **Driveway:** **Road:**

Land Type	Units	Base Rate	NC	Adj	Site	Road	DWay	Topography	Cond	Ad Valorem	SPI	R	Tax Value	Notes
1F RES	0		E											
	0 ac													

PICTURE

OWNER

JALBERT, GERARD E.
JALBERT, PATRICIA A.
34 ASH DRIVE

KINGSTON, NH 03848-3350

TAXABLE DISTRICTS

District	Percentage

PERMITS

Date	Permit ID	Permit Type	Notes
11/01/03	R16-5-5-31	BUILDING	CONDOMINIUM UNIT # 31

BUILDING DETAILS

Model: **1.50 STORY FRAME TOWNHOUSE**
Roof: **GABLE HIP/ASPHALT**
Ext: **VINYL SIDING**
Int: **DRYWALL**
Floor: **CARPET/HARDWOOD**
Heat: **GAS/FA DUCTED**
Bedrooms: **1** Baths: **2.0** Fixtures:
Extra Kitchens: Fireplaces:
A/C: **Yes 100.00 %** Generators:
Quality: **A0 AVG**
Com. Wall:
Size Adj: **1.0269** Base Rate: **RCT 84.00**
Bldg. Rate: **1.0064**
Sq. Foot Cost: **$ 84.53**

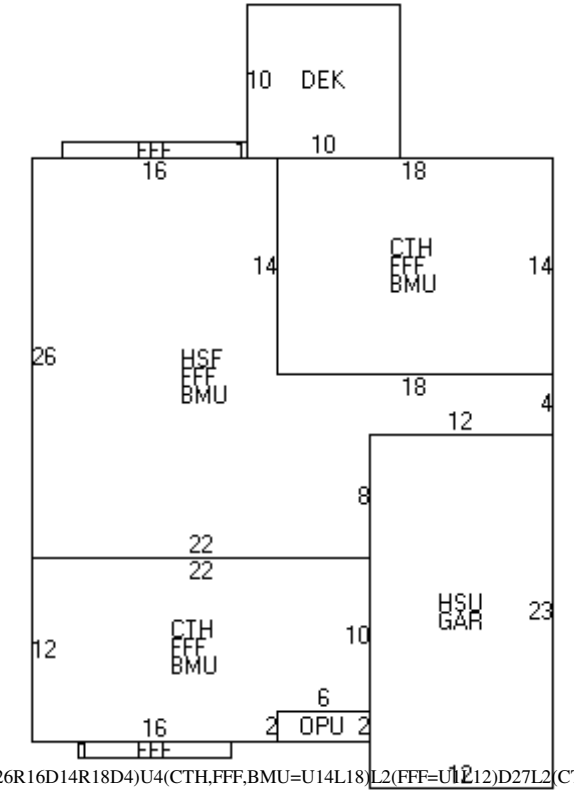

(HSU,GAR=R12U23)(HSF,FFF,BMU=L12D8L22U26R16D14R18D4)U4(CTH,FFF,BMU=U14L18)L2(FFF=U12R12)D27L2(CTH,FFF,BMU=D12R16IU2R6U10L22)D12R3(FFF=D1R10)U1R3(OPU=R6U2)U36R2(DEK=L10U10)

BUILDING SUB AREA DETAILS

ID	Description	Area	Adj.	Effect.
HSU	1/2 STRY UNFIN	276	0.25	69
GAR	GARAGE	276	0.45	124
HSF	1/2 STRY FIN	536	0.50	268
FFF	FST FLR FIN	1062	1.00	1062
BMU	BSMNT	1040	0.15	156
CTH	CATHEDRAL	504	0.10	50
OPU	OPEN PORCH	12	0.15	2
DEK	DECK/ENTRANCE	100	0.10	10
GLA:	**1,330**	**3,806**		**1,741**

2013 BASE YEAR BUILDING VALUATION

Market Cost New:		**$ 147,167**
Year Built:		**2004**
Condition For Age:	AVERAGE	**8 %**
Physical:		
Functional:		
Economic:		
Temporary:		
Total Depreciation:		**8 %**
Building Value:		**$ 135,400**

OWNER INFORMATION

FONTAINE, PAUL E. - TRUSTEE
FONTAINE FAMILY IRREVOCABLE TR
21 EDDINGTON STREET

MIDDLETON, MA 01949

SALES HISTORY

Date	Book	Page	Type	Price	Grantor
04/12/2011	5208	75	U I 38		FONTAINE, SHIRLEY A.
11/21/2007	4863	1982	U I 38		FONTAINE, GILBERT
07/01/2005	4506	2480	Q I	250,000	RIVER VALLEY DEV.

PICTURE

LISTING HISTORY

01/14/14	KCM	
05/13/10	KCM	CYCLICAL LISTING
03/24/06	JARX	HS. 100% COMP.
03/07/05	BW O	UNIT 70% COMP.; CK. '06
04/06/04	SH V	NEW

NOTES

EXTRA FEATURES VALUATION

Feature Type	Units	Lngth x Width	Size Adj	Rate	Cond	Market Value	Notes
FIREPLACE GAS	1		100	2,500.00	100	2,500	
ASH DR, CONDOS	1		100	32,000.00	100	32,000	
						34,500	

MUNICIPAL SOFTWARE BY AVITAR

KINGSTON ASSESSING OFFICE

PARCEL TOTAL TAXABLE VALUE

Year	Building	Features	Land
2014	$ 135,300	$ 34,500	$ 0
		Parcel Total: $ 169,800	
2015	$ 135,300	$ 34,500	$ 0
		Parcel Total: $ 169,800	
2016	**$ 135,300**	**$ 34,500**	**$ 0**
		Parcel Total: $ 169,800	

LAND VALUATION

Zone: RRAQ RR W/AQUIFER **Minimum Acreage:** 3.00 **Minimum Frontage:** 200 **Site:** **Driveway:** **Road:**

Land Type	Units	Base Rate	NC	Adj	Site	Road	DWay	Topography	Cond	Ad Valorem	SPI	R	Tax Value	Notes
1F RES	0		E											
	0 ac													

PICTURE

OWNER

FONTAINE, PAUL E. - TRUSTEE
FONTAINE FAMILY IRREVOCABLE TR
21 EDDINGTON STREET

MIDDLETON, MA 01949

TAXABLE DISTRICTS

District	Percentage

PERMITS

Date	Permit ID	Permit Type	Notes
12/21/11	R16-5-5-32	ELECTRIC PERMIT	FOR GENERATOR
06/30/05	R16-5-5-32	OCCUPANCY PERMIT	
11/01/03	R16-5-5-32	BUILDING	CONDOMINIUM UNIT #32

BUILDING DETAILS

Model: **1.50 STORY FRAME TOWNHOUSE**
Roof: **GABLE HIP/ASPHALT**
Ext: **VINYL SIDING**
Int: **DRYWALL**
Floor: **CARPET/HARDWOOD**
Heat: **GAS/FA DUCTED**
Bedrooms: **1** Baths: **2.0** Fixtures:
Extra Kitchens: Fireplaces:
A/C: **Yes 100.00 %** Generators:
Quality: **A0 AVG**
Com. Wall:
Size Adj: **1.0270** Base Rate: **RCT 84.00**
Bldg. Rate: **1.0065**
Sq. Foot Cost: **$ 84.54**

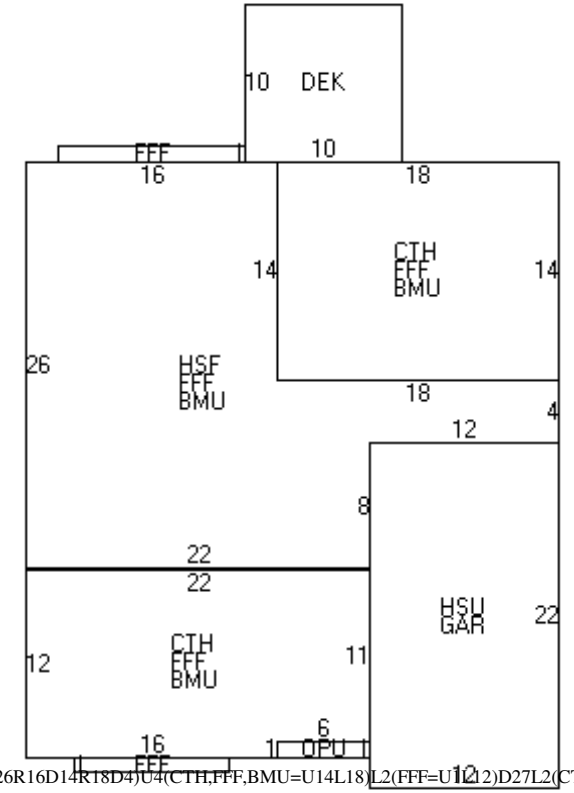

(HSU,GAR=R12U22)(HSF,FFF,BMU=L12D8L22U26R16D14R18D4)U4(CTH,FFF,BMU=U14L18)L2(FFF=U12)D27L2(CTH,FFF,BMU=D12R16IU1R6U11L22)D12R3(FFF=D1R10)U1R3(OPU=R6U1)U37R2(DEK=L10U10)

BUILDING SUB AREA DETAILS

ID	Description	Area	Adj.	Effect.
HSU	1/2 STRY UNFIN	264	0.25	66
GAR	GARAGE	264	0.45	119
HSF	1/2 STRY FIN	536	0.50	268
FFF	FST FLR FIN	1068	1.00	1068
BMU	BSMNT	1046	0.15	157
CTH	CATHEDRAL	510	0.10	51
OPU	OPEN PORCH	6	0.15	1
DEK	DECK/ENTRANCE	100	0.10	10
GLA:	**1,336**	**3,794**		**1,740**

2013 BASE YEAR BUILDING VALUATION

Market Cost New:		**$ 147,100**
Year Built:		**2004**
Condition For Age:	AVERAGE	**8 %**
Physical:		
Functional:		
Economic:		
Temporary:		
Total Depreciation:		**8 %**
Building Value:		**$ 135,300**

OWNER INFORMATION

SAVARESE, JL & NM TRSTS.
SAVARESE FAMILY REV. TRUST
38 ASH DRIVE

KINGSTON,, NH 03848

SALES HISTORY

Date	Book	Page	Type	Price	Grantor
09/22/2005	4552	1870	U I 38		SAVARESE
01/31/2005	4431	1706	Q I	249,933	RIVER VALLEY

PICTURE

LISTING HISTORY

01/14/14 KCM
05/14/10 KCM
03/07/05 BW X
04/06/04 SH V

NOTES

CHECK 2005, 3/05 EST UNIT 100%-BW, ADD A/C 5/10KC

EXTRA FEATURES VALUATION

Feature Type	Units	Lngth x Width	Size Adj	Rate	Cond	Market Value	Notes
FIREPLACE GAS	1		100	2,500.00	100	2,500	
ASH DR, CONDOS	1		100	32,000.00	100	32,000	
						34,500	

MUNICIPAL SOFTWARE BY AVITAR

KINGSTON ASSESSING OFFICE

PARCEL TOTAL TAXABLE VALUE

Year	Building	Features	Land
2014	$ 135,400	$ 34,500	$ 0
		Parcel Total: $ 169,900	
2015	$ 135,400	$ 34,500	$ 0
		Parcel Total: $ 169,900	
2016	**$ 135,400**	**$ 34,500**	**$ 0**
		Parcel Total: $ 169,900	

LAND VALUATION

Zone: RRAQ RR W/AQUIFER **Minimum Acreage:** 3.00 **Minimum Frontage:** 200 **Site:** **Driveway:** **Road:**

Land Type	Units	Base Rate	NC	Adj	Site	Road	DWay	Topography	Cond	Ad Valorem	SPI	R	Tax Value	Notes
1F RES	0		E											
	0 ac													

PICTURE

OWNER

SAVARESE, JL & NM TRSTS.
SAVARESE FAMILY REV. TRUST
38 ASH DRIVE

KINGSTON,, NH 03848

TAXABLE DISTRICTS

District	Percentage

PERMITS

Date	Permit ID	Permit Type	Notes
11/01/03	R16-5-5-33	BUILDING	CONDOMINIUM UNIT #33

BUILDING DETAILS

Model: **1.50 STORY FRAME TOWNHOUSE**
Roof: **GABLE HIP/ASPHALT**
Ext: **VINYL SIDING**
Int: **DRYWALL**
Floor: **CARPET/HARDWOOD**
Heat: **GAS/FA DUCTED**
Bedrooms: **1** Baths: **2.0** Fixtures:
Extra Kitchens: Fireplaces:
A/C: **Yes 100.00 %** Generators:
Quality: **A0 AVG**
Com. Wall:
Size Adj: **1.0269** Base Rate: **RCT 84.00**
Bldg. Rate: **1.0064**
Sq. Foot Cost: **$ 84.53**

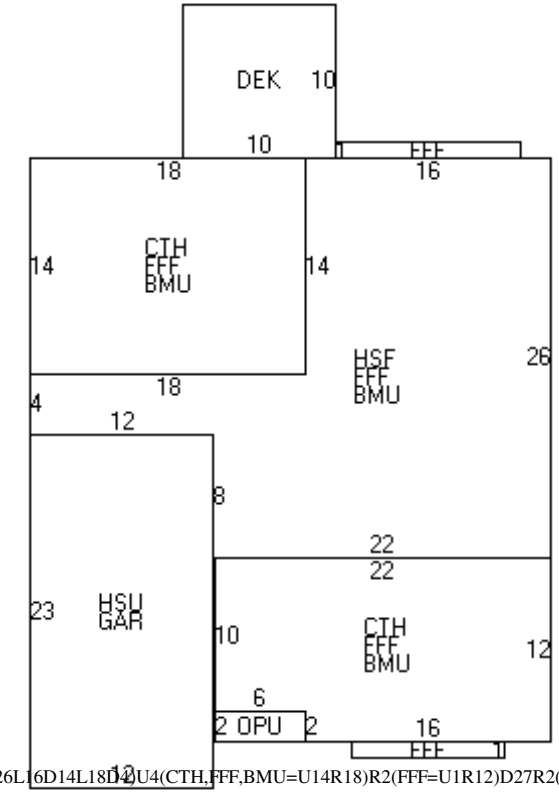

(HSU,GAR=L12U23)(HSF,FFF,BMU=R12D8R22U26L16D14L18D4U4(CTH,FFF,BMU=U14R18)R2(FFF=U1R12)D27R2(CTH,FFF,BMU=D12L16IU2L6U10R22)D12L3(FFF=D1L10)U1L3(OPU=L6U2)U36L2(DEK=R10U10)

BUILDING SUB AREA DETAILS

ID	Description	Area	Adj.	Effect.
HSU	1/2 STRY UNFIN	276	0.25	69
GAR	GARAGE	276	0.45	124
HSF	1/2 STRY FIN	536	0.50	268
FFF	FST FLR FIN	1062	1.00	1062
BMU	BSMNT	1040	0.15	156
CTH	CATHEDRAL	504	0.10	50
OPU	OPEN PORCH	12	0.15	2
DEK	DECK/ENTRANCE	100	0.10	10
GLA:	**1,330**	**3,806**		**1,741**

2013 BASE YEAR BUILDING VALUATION

Market Cost New:		**$ 147,167**
Year Built:		**2004**
Condition For Age:	AVERAGE	**8 %**
Physical:		
Functional:		
Economic:		
Temporary:		
Total Depreciation:		**8 %**
Building Value:		**$ 135,400**

OWNER INFORMATION

SULLIVAN, WILLIAM E
SULLIVAN, MARGARET E
40 ASH DRIVE, UNIT 40

KINGSTON, NH 03848

SALES HISTORY

Date	Book	Page	Type	Price	Grantor
06/26/2015	5630	0875	Q I	229,900	HUME, DAVID A.
05/17/2005	4481	1658	Q I	249,933	RIVER VALLEY

PICTURE

LISTING HISTORY

01/14/14	KCM	
05/13/10	KCM	
03/07/05	BW O	UNIT 100%
04/06/04	SH V	CHECK 2005

NOTES

D-30670. VACANT.

EXTRA FEATURES VALUATION

Feature Type	Units	Lngth x Width	Size Adj	Rate	Cond	Market Value	Notes
FIREPLACE GAS	1		100	2,500.00	100	2,500	
ASH DR, CONDOS	1		100	32,000.00	100	32,000	
						34,500	

MUNICIPAL SOFTWARE BY AVITAR

KINGSTON ASSESSING OFFICE

PARCEL TOTAL TAXABLE VALUE

Year	Building	Features	Land
2014	$ 135,400	$ 34,500	$ 0
		Parcel Total: $ 169,900	
2015	$ 135,400	$ 34,500	$ 0
		Parcel Total: $ 169,900	
2016	**$ 135,400**	**$ 34,500**	**$ 0**
		Parcel Total: $ 169,900	

LAND VALUATION

Zone: RRAQ RR W/AQUIFER **Minimum Acreage:** 3.00 **Minimum Frontage:** 200 **Site:** **Driveway:** **Road:**

Land Type	Units	Base Rate	NC	Adj	Site	Road	DWay	Topography	Cond	Ad Valorem	SPI	R	Tax Value	Notes
1F RES	0		E											
	0 ac													

Map: 000R16 **Lot: 000005** **Sub: 005-34** **Card: 1 of 1** **40 ASH DR** **KINGSTON** **Printed: 08/02/2016**

PICTURE

OWNER

SULLIVAN, WILLIAM E
SULLIVAN, MARGARET E
40 ASH DRIVE, UNIT 40

KINGSTON, NH 03848

TAXABLE DISTRICTS

District	Percentage

PERMITS

Date	Permit ID	Permit Type	Notes
11/01/03	R16-5-5-34	BUILDING	CONDOMINIUM UNIT #34

BUILDING DETAILS

Model: **1.50 STORY FRAME TOWNHOUSE**
Roof: **GABLE HIP/ASPHALT**
Ext: **VINYL SIDING**
Int: **DRYWALL**
Floor: **CARPET/HARDWOOD**
Heat: **GAS/FA DUCTED**
Bedrooms: **1** Baths: **2.0** Fixtures:
Extra Kitchens: Fireplaces:
A/C: **Yes 100.00 %** Generators:
Quality: **A0 AVG**
Com. Wall:
Size Adj: **1.0269** Base Rate: **RCT 84.00**
Bldg. Rate: **1.0064**
Sq. Foot Cost: **$ 84.53**

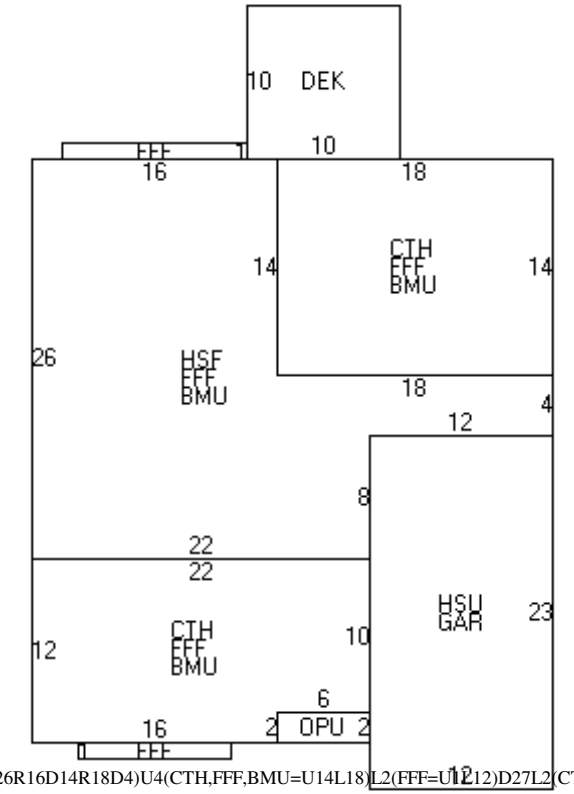

(HSU,GAR=R12U23)(HSF,FFF,BMU=L12D8L22U26R16D14R18D4)U4(CTH,FFF,BMU=U14L18)L2(FFF=U12R12)D27L2(CTH,FFF,BMU=D12R16IU2R6U10L22)D12R3(FFF=D1R10)U1R3(OPU=R6U2)U36R2(DEK=L10U10)

BUILDING SUB AREA DETAILS

ID	Description	Area	Adj.	Effect.
HSU	1/2 STRY UNFIN	276	0.25	69
GAR	GARAGE	276	0.45	124
HSF	1/2 STRY FIN	536	0.50	268
FFF	FST FLR FIN	1062	1.00	1062
BMU	BSMNT	1040	0.15	156
CTH	CATHEDRAL	504	0.10	50
OPU	OPEN PORCH	12	0.15	2
DEK	DECK/ENTRANCE	100	0.10	10
GLA:	**1,330**	**3,806**		**1,741**

2013 BASE YEAR BUILDING VALUATION

Market Cost New:		**$ 147,167**
Year Built:		**2004**
Condition For Age:	AVERAGE	**8 %**
Physical:		
Functional:		
Economic:		
Temporary:		
Total Depreciation:		**8 %**
Building Value:		**$ 135,400**

OWNER INFORMATION

SAFOS, STEPHEN J
SAFOS, ANDREA L
42 ASH DRIVE, UNIT 35

KINGSTON, NH 03848-3350

SALES HISTORY

Date	Book	Page	Type	Price	Grantor
08/01/2016	5738	1315	Q I	222,000	MOURED, CAROLE A. -
05/16/2012	5316	1960	Q I	170,000	CALABRIA, JEANNE
01/06/2005	4422	199	Q I	244,933	RIVER VALLEY

PICTURE

LISTING HISTORY

01/14/14	KCM	ADJ DEK PLACEMENT
04/23/13	KC M	
05/13/10	KCM	CYCLICAL
03/07/05	BW X	EST UNIT 100%-BW
04/06/04	SH V	CK 2005

NOTES

D-30670.

EXTRA FEATURES VALUATION

Feature Type	Units	Lngth x Width	Size Adj	Rate	Cond	Market Value	Notes
FIREPLACE GAS	1		100	2,500.00	100	2,500	
ASH DR, CONDOS	1		100	32,000.00	100	32,000	
						34,500	

MUNICIPAL SOFTWARE BY AVITAR.

KINGSTON ASSESSING OFFICE

PARCEL TOTAL TAXABLE VALUE

Year	Building	Features	Land
2014	$ 134,900	$ 34,500	$ 0
		Parcel Total: $ 169,400	
2015	$ 134,900	$ 34,500	$ 0
		Parcel Total: $ 169,400	
2016	**$ 134,900**	**$ 34,500**	**$ 0**
		Parcel Total: $ 169,400	

LAND VALUATION

Zone: RRAQ RR W/AQUIFER **Minimum Acreage:** 3.00 **Minimum Frontage:** 200 **Site:** **Driveway:** **Road:**

Land Type	Units	Base Rate	NC	Adj	Site	Road	DWay	Topography	Cond	Ad Valorem	SPI	R	Tax Value	Notes
1F RES	0		E											
	0 ac													

PICTURE

OWNER

SAFOS, STEPHEN J
SAFOS, ANDREA L
42 ASH DRIVE, UNIT 35

KINGSTON, NH 03848-3350

TAXABLE DISTRICTS

District	Percentage

PERMITS

Date	Permit ID	Permit Type	Notes
01/04/05	R16-5-5-35	OCCUPANCY PERMIT	CONDOMINIUM UNIT #35
11/01/03	R16-5-5-35	BUILDING	CONDOMINIUM UNIT #35

BUILDING DETAILS

Model: **1.50 STORY FRAME TOWNHOUSE**
Roof: **GABLE HIP/ASPHALT**
Ext: **VINYL SIDING**
Int: **DRYWALL**
Floor: **CARPET/HARDWOOD**
Heat: **GAS/FA DUCTED**
Bedrooms: **1** Baths: **2.0** Fixtures:
Extra Kitchens: Fireplaces:
A/C: **Yes 100.00 %** Generators:
Quality: **A0 AVG**
Com. Wall:
Size Adj: **1.0281** Base Rate: **RCT 84.00**
Bldg. Rate: **1.0075**
Sq. Foot Cost: **$ 84.63**

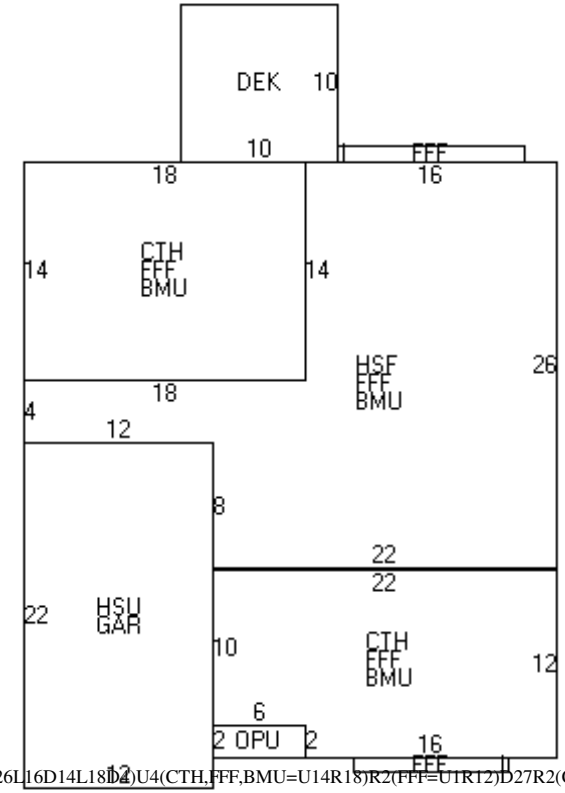

(HSU,GAR=L12U22)(HSF,FFF,BMU=R12D8R22U26L16D14L18D4)U4(CTH,FFF,BMU=U14R18)R2(FFF=U1R12)D27R2(CTH,FFF,BMU=D12L16IU2L6U10R22)D12L3(FFF=D1L10)U1L3(OPU=L6U2)U36L2(DEK=R10U10)

BUILDING SUB AREA DETAILS

ID	Description	Area	Adj.	Effect.
HSU	1/2 STRY UNFIN	264	0.25	66
GAR	GARAGE	264	0.45	119
HSF	1/2 STRY FIN	536	0.50	268
FFF	FST FLR FIN	1062	1.00	1062
BMU	BSMNT	1040	0.15	156
CTH	CATHEDRAL	504	0.10	50
OPU	OPEN PORCH	12	0.15	2
DEK	DECK/ENTRANCE	100	0.10	10
GLA:	**1,330**	**3,782**		**1,733**

2013 BASE YEAR BUILDING VALUATION

Market Cost New:		**$ 146,664**
Year Built:		**2004**
Condition For Age:	AVERAGE	**8 %**
Physical:		
Functional:		
Economic:		
Temporary:		
Total Depreciation:		**8 %**
Building Value:		**$ 134,900**

OWNER INFORMATION

LAGRASSE, KENNETH
LAGRASSE, KATHLEEN
44 ASH DRIVE

KINGSTON, NH 03848-3350

SALES HISTORY

Date	Book	Page	Type	Price	Grantor
12/17/2004	4412	0905	Q I	249,900	RIVER VALLEY DEV.

PICTURE

LISTING HISTORY

01/14/14 KCM
05/13/10 KCM
03/07/05 BW X
04/06/04 SH V

NOTES

CHECK 2005, 3/05 EST UNIT 100%-BW

EXTRA FEATURES VALUATION

Feature Type	Units	Lngth x Width	Size Adj	Rate	Cond	Market Value	Notes
FIREPLACE GAS	1		100	2,500.00	100	2,500	
ASH DR, CONDOS	1		100	32,000.00	100	32,000	
						34,500	

MUNICIPAL SOFTWARE BY AVITAR.

KINGSTON ASSESSING OFFICE

PARCEL TOTAL TAXABLE VALUE

Year	Building	Features	Land
2014	$ 135,400	$ 34,500	$ 0
		Parcel Total: $ 169,900	
2015	$ 135,400	$ 34,500	$ 0
		Parcel Total: $ 169,900	
2016	**$ 135,400**	**$ 34,500**	**$ 0**
		Parcel Total: $ 169,900	

LAND VALUATION

Zone: RRAQ RR W/AQUIFER **Minimum Acreage:** 3.00 **Minimum Frontage:** 200 **Site:** **Driveway:** **Road:**

Land Type	Units	Base Rate	NC	Adj	Site	Road	DWay	Topography	Cond	Ad Valorem	SPI	R	Tax Value	Notes
1F RES	0		E											
	0 ac													

PICTURE

OWNER

LAGRASSE, KENNETH
LAGRASSE, KATHLEEN
44 ASH DRIVE

KINGSTON, NH 03848-3350

TAXABLE DISTRICTS

District	Percentage

PERMITS

Date	Permit ID	Permit Type	Notes
11/01/03	R16-5-5-36	BUILDING	CONDOMINIUM UNIT #36

BUILDING DETAILS

Model: **1.50 STORY FRAME TOWNHOUSE**
Roof: **GABLE HIP/ASPHALT**
Ext: **VINYL SIDING**
Int: **DRYWALL**
Floor: **CARPET/HARDWOOD**
Heat: **GAS/FA DUCTED**
Bedrooms: **1** Baths: **2.0** Fixtures:
Extra Kitchens: Fireplaces:
A/C: **Yes 100.00 %** Generators:
Quality: **A0 AVG**
Com. Wall:
Size Adj: **1.0269** Base Rate: **RCT 84.00**
Bldg. Rate: **1.0064**
Sq. Foot Cost: **$ 84.53**

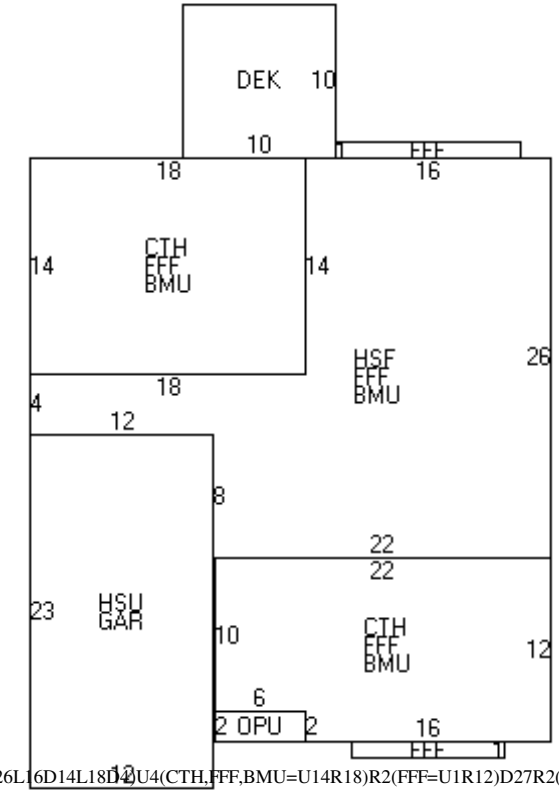

(HSU,GAR=L12U23)(HSF,FFF,BMU=R12D8R22U26L16D14L18D4U4(CTH,FFF,BMU=U14R18)R2(FFF=U1R12)D27R2(CTH,FFF,BMU=D12L16IU2L6U10R22)D12L3(FFF=D1L10)U1L3(OPU=L6U2)U36L2(DEK=R10U10)

BUILDING SUB AREA DETAILS

ID	Description	Area	Adj.	Effect.
HSU	1/2 STRY UNFIN	276	0.25	69
GAR	GARAGE	276	0.45	124
HSF	1/2 STRY FIN	536	0.50	268
FFF	FST FLR FIN	1062	1.00	1062
BMU	BSMNT	1040	0.15	156
CTH	CATHEDRAL	504	0.10	50
OPU	OPEN PORCH	12	0.15	2
DEK	DECK/ENTRANCE	100	0.10	10
GLA:	**1,330**	**3,806**		**1,741**

2013 BASE YEAR BUILDING VALUATION

Market Cost New:		**$ 147,167**
Year Built:		**2004**
Condition For Age:	AVERAGE	**8 %**
Physical:		
Functional:		
Economic:		
Temporary:		
Total Depreciation:		**8 %**
Building Value:		**$ 135,400**

OWNER INFORMATION

PUNTONI, MICHAEL & LESLIE
PUNTONI REVOCABLE TRUST
46 ASH DRIVE

KINGSTON, NH 03848

SALES HISTORY

Date	Book	Page	Type	Price	Grantor
07/19/2016	5734	824	U I 38		PUNTONI, MICHAEL
07/17/2014	5546	0027	Q I	214,000	MORIN, GEORGE A.
11/16/2004	4395	893	Q I	249,933	RIVER VALLEY

PICTURE

LISTING HISTORY

01/14/14	KCM	
05/13/10	KCM	
03/07/05	BW X	EST UNIT 100%
04/06/04	SH V	

NOTES

D-30670.

EXTRA FEATURES VALUATION

Feature Type	Units	Lngth x Width	Size Adj	Rate	Cond	Market Value	Notes
FIREPLACE GAS	1		100	2,500.00	100	2,500	
ASH DR, CONDOS	1		100	32,000.00	100	32,000	
						34,500	

MUNICIPAL SOFTWARE BY AVITAR

KINGSTON ASSESSING OFFICE

PARCEL TOTAL TAXABLE VALUE

Year	Building	Features	Land
2014	$ 135,400	$ 34,500	$ 0
		Parcel Total: $ 169,900	
2015	$ 135,400	$ 34,500	$ 0
		Parcel Total: $ 169,900	
2016	**$ 135,400**	**$ 34,500**	**$ 0**
		Parcel Total: $ 169,900	

LAND VALUATION

Zone: RRAQ RR W/AQUIFER **Minimum Acreage:** 3.00 **Minimum Frontage:** 200 **Site:** **Driveway:** **Road:**

Land Type	Units	Base Rate	NC	Adj	Site	Road	DWay	Topography	Cond	Ad Valorem	SPI	R	Tax Value	Notes
1F RES	0		E											
	0 ac													

Map: 000R16 **Lot: 000005** **Sub: 005-37** **Card: 1 of 1** **46 ASH DR** **KINGSTON** **Printed: 08/02/2016**

PICTURE

OWNER

PUNTONI, MICHAEL & LESLIE
PUNTONI REVOCABLE TRUST
46 ASH DRIVE

KINGSTON, NH 03848

TAXABLE DISTRICTS

District	Percentage

PERMITS

Date	Permit ID	Permit Type	Notes
11/01/03	R16-5-5-37	BUILDING	CONDOMINIUM UNIT #37

BUILDING DETAILS

Model: **1.50 STORY FRAME TOWNHOUSE**
Roof: **GABLE HIP/ASPHALT**
Ext: **VINYL SIDING**
Int: **DRYWALL**
Floor: **CARPET/HARDWOOD**
Heat: **GAS/FA DUCTED**
Bedrooms: **1** Baths: **2.0** Fixtures:
Extra Kitchens: Fireplaces:
A/C: **Yes 100.00 %** Generators:
Quality: **A0 AVG**
Com. Wall:
Size Adj: **1.0269** Base Rate: **RCT 84.00**
Bldg. Rate: **1.0064**
Sq. Foot Cost: **$ 84.53**

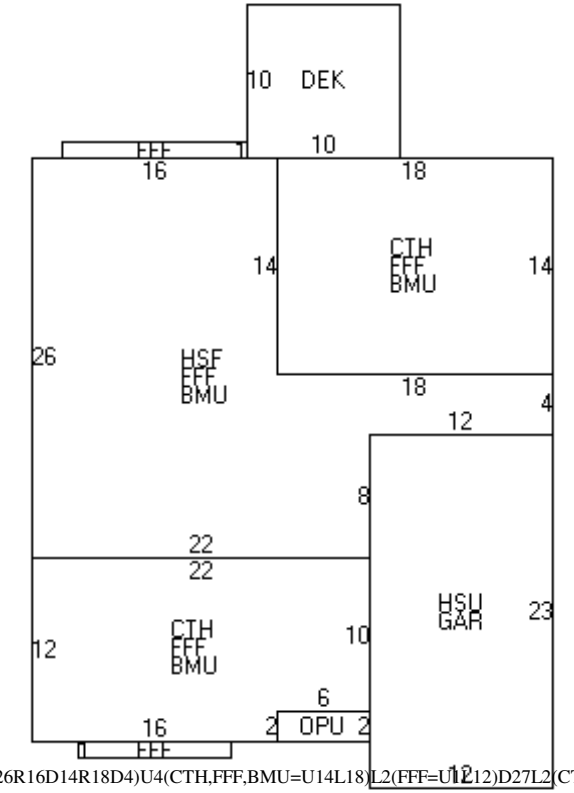

(HSU,GAR=R12U23)(HSF,FFF,BMU=L12D8L22U26R16D14R18D4)U4(CTH,FFF,BMU=U14L18)L2(FFF=U12R12)D27L2(CTH,FFF,BMU=D12R16IU2R6U10L22)D12R3(FFF=D1R10)U1R3(OPU=R6U2)U36R2(DEK=L10U10)

BUILDING SUB AREA DETAILS

ID	Description	Area	Adj.	Effect.
HSU	1/2 STRY UNFIN	276	0.25	69
GAR	GARAGE	276	0.45	124
HSF	1/2 STRY FIN	536	0.50	268
FFF	FST FLR FIN	1062	1.00	1062
BMU	BSMNT	1040	0.15	156
CTH	CATHEDRAL	504	0.10	50
OPU	OPEN PORCH	12	0.15	2
DEK	DECK/ENTRANCE	100	0.10	10
GLA:	**1,330**	**3,806**		**1,741**

2013 BASE YEAR BUILDING VALUATION

Market Cost New:		**$ 147,167**
Year Built:		**2004**
Condition For Age:	AVERAGE	**8 %**
Physical:		
Functional:		
Economic:		
Temporary:		
Total Depreciation:		**8 %**
Building Value:		**$ 135,400**

OWNER INFORMATION

CLEMENT, RONALD T. SR.
CLEMENT, DEBRA
48 ASH DRIVE

KINGSTON, NH 03848

SALES HISTORY

Date	Book	Page	Type	Price	Grantor
06/04/2012	5322	0069	U I 81	143,533	CARPENTER, DOLORES, HE
05/01/2006	4648	2855	Q I	260,000	CASEY
02/28/2005	4443	1012	Q I	244,933	RIVER VALLEY

PICTURE

LISTING HISTORY

01/14/14	KCM	
05/13/10	KCM	
03/07/05	BW X	EST UNIT 100%
04/06/04	SH V	

NOTES

D-30670.

EXTRA FEATURES VALUATION

Feature Type	Units	Lngth x Width	Size Adj	Rate	Cond	Market Value	Notes
FIREPLACE GAS	1		100	2,500.00	100	2,500	
ASH DR, CONDOS	1		100	32,000.00	100	32,000	
						34,500	

MUNICIPAL SOFTWARE BY AVITAR.

KINGSTON ASSESSING OFFICE

PARCEL TOTAL TAXABLE VALUE

Year	Building	Features	Land
2014	$ 148,900	$ 34,500	$ 0
		Parcel Total: $ 183,400	
2015	$ 148,900	$ 34,500	$ 0
		Parcel Total: $ 183,400	
2016	**$ 148,900**	**$ 34,500**	**$ 0**
		Parcel Total: $ 183,400	

LAND VALUATION

Zone: RRAQ RR W/AQUIFER **Minimum Acreage:** 3.00 **Minimum Frontage:** 200 **Site:** **Driveway:** **Road:**

Land Type	Units	Base Rate	NC	Adj	Site	Road	DWay	Topography	Cond	Ad Valorem	SPI	R	Tax Value	Notes
1F RES	0		E											
	0 ac													

Map: 000R16 **Lot: 000005** **Sub: 005-38** **Card: 1 of 1** **48 ASH DR** **KINGSTON** **Printed: 08/02/2016**

PICTURE

OWNER

CLEMENT, RONALD T. SR.
CLEMENT, DEBRA
48 ASH DRIVE

KINGSTON, NH 03848

TAXABLE DISTRICTS

District	Percentage

PERMITS

Date	Permit ID	Permit Type	Notes
11/23/05	R16-5-5-38	OCCUPANCY PERMIT	1-BEDROOM CONDO
11/01/03	R16-5-5-38	BUILDING	CONDOMINIUM UNIT #38

BUILDING DETAILS

Model: **1.50 STORY FRAME TOWNHOUSE**
Roof: **GABLE HIP/ASPHALT**
Ext: **VINYL SIDING**
Int: **DRYWALL**
Floor: **CARPET/HARDWOOD**
Heat: **GAS/FA DUCTED**
Bedrooms: **1** Baths: **2.0** Fixtures:
Extra Kitchens: Fireplaces:
A/C: **Yes 100.00 %** Generators:
Quality: **A1 AVG+10**
Com. Wall:
Size Adj: **1.0269** Base Rate: **RCT 84.00**
Bldg. Rate: **1.1070**
Sq. Foot Cost: **$ 92.99**

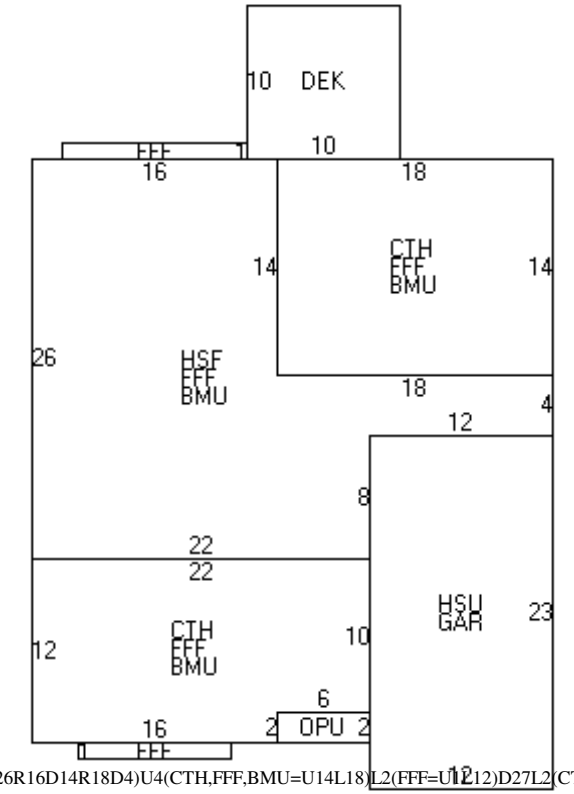

(HSU,GAR=R12U23)(HSF,FFF,BMU=L12D8L22U26R16D14R18D4)U4(CTH,FFF,BMU=U14L18)L2(FFF=U12L12)D27L2(CTH,FFF,BMU=D12R16IU2R6U10L22)D12R3(FFF=D1R10)U1R3(OPU=R6U2)U36R2(DEK=L10U10)

BUILDING SUB AREA DETAILS

ID	Description	Area	Adj.	Effect.
BMU	BSMNT	1040	0.15	156
HSU	1/2 STRY UNFIN	276	0.25	69
GAR	GARAGE	276	0.45	124
HSF	1/2 STRY FIN	536	0.50	268
FFF	FST FLR FIN	1062	1.00	1062
CTH	CATHEDRAL	504	0.10	50
OPU	OPEN PORCH	12	0.15	2
DEK	DECK/ENTRANCE	100	0.10	10
GLA:	**1,330**	**3,806**		**1,741**

2013 BASE YEAR BUILDING VALUATION

Market Cost New:		**$ 161,896**
Year Built:		**2004**
Condition For Age:	AVERAGE	**8 %**
Physical:		
Functional:		
Economic:		
Temporary:		
Total Depreciation:		**8 %**
Building Value:		**$ 148,900**

OWNER INFORMATION

NEWBURY, MARY

50 ASH DRIVE

KINGSTON, NH 03848-3350

SALES HISTORY

Date	Book	Page	Type	Price	Grantor
03/10/2005	4448	1057	Q I	244,900	RIVER VALLEY DEV.

PICTURE

LISTING HISTORY

01/14/14	KCM
05/13/10	KCM
03/07/05	BW O
04/06/04	SH V

NOTES

VACANT CHECK 2005, 3/05 UNIT FIN-BW

EXTRA FEATURES VALUATION

Feature Type	Units	Lngth x Width	Size Adj	Rate	Cond	Market Value	Notes
FIREPLACE GAS	1		100	2,500.00	100	2,500	
ASH DR, CONDOS	1		100	32,000.00	100	32,000	
						34,500	

MUNICIPAL SOFTWARE BY AVITAR

KINGSTON ASSESSING OFFICE

PARCEL TOTAL TAXABLE VALUE

Year	Building	Features	Land
2014	$ 134,900	$ 34,500	$ 0
		Parcel Total: $ 169,400	
2015	$ 134,900	$ 34,500	$ 0
		Parcel Total: $ 169,400	
2016	**$ 134,900**	**$ 34,500**	**$ 0**
		Parcel Total: $ 169,400	

LAND VALUATION

Zone: RRAQ RR W/AQUIFER **Minimum Acreage:** 3.00 **Minimum Frontage:** 200 **Site:** **Driveway:** **Road:**

Land Type	Units	Base Rate	NC	Adj	Site	Road	DWay	Topography	Cond	Ad Valorem	SPI	R	Tax Value	Notes
1F RES	0		E											
	0 ac													

PICTURE

OWNER

NEWBURY, MARY

50 ASH DRIVE

KINGSTON, NH 03848-3350

TAXABLE DISTRICTS

District	Percentage

PERMITS

Date	Permit ID	Permit Type	Notes
11/01/03	R16-5-5-39	BUILDING	CONDOMINIUM UNIT #39

BUILDING DETAILS

Model: **1.50 STORY FRAME TOWNHOUSE**
Roof: **GABLE HIP/ASPHALT**
Ext: **VINYL SIDING**
Int: **DRYWALL**
Floor: **CARPET/HARDWOOD**
Heat: **GAS/FA DUCTED**
Bedrooms: **1** Baths: **2.0** Fixtures:
Extra Kitchens: Fireplaces:
A/C: **Yes 100.00 %** Generators:
Quality: **A0 AVG**
Com. Wall:
Size Adj: **1.0281** Base Rate: **RCT 84.00**
Bldg. Rate: **1.0075**
Sq. Foot Cost: **$ 84.63**

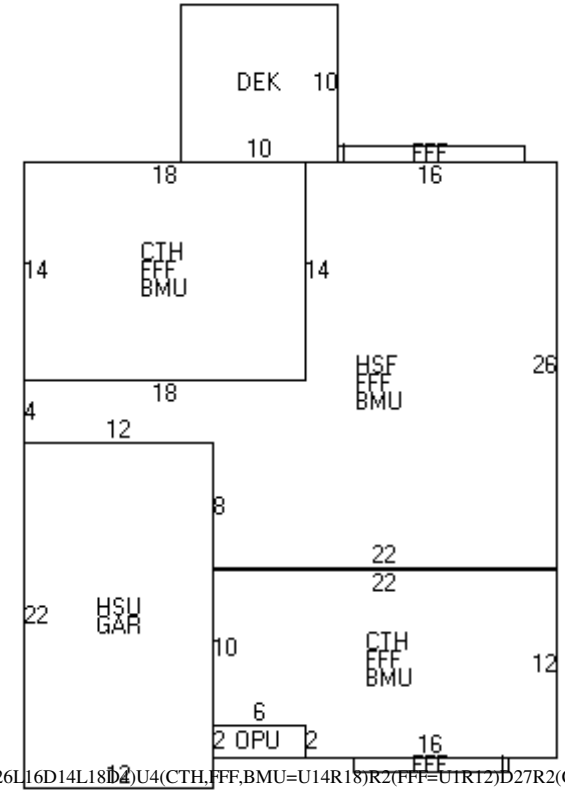

(HSU,GAR=L12U22)(HSF,FFF,BMU=R12D8R22U26L16D14L18D4)U4(CTH,FFF,BMU=U14R18)R2(FFF=U1R12)D27R2(CTH,FFF,BMU=D12L16IU2L6U10R22)D12L3(FFF=D1L10)U1L3(OPU=L6U2)U36L2(DEK=R10U10)

BUILDING SUB AREA DETAILS

ID	Description	Area	Adj.	Effect.
HSU	1/2 STRY UNFIN	264	0.25	66
GAR	GARAGE	264	0.45	119
HSF	1/2 STRY FIN	536	0.50	268
FFF	FST FLR FIN	1062	1.00	1062
BMU	BSMNT	1040	0.15	156
CTH	CATHEDRAL	504	0.10	50
OPU	OPEN PORCH	12	0.15	2
DEK	DECK/ENTRANCE	100	0.10	10
GLA:	**1,330**	**3,782**		**1,733**

2013 BASE YEAR BUILDING VALUATION

Market Cost New:		**$ 146,664**
Year Built:		**2004**
Condition For Age:	AVERAGE	**8 %**
Physical:		
Functional:		
Economic:		
Temporary:		
Total Depreciation:		**8 %**
Building Value:		**$ 134,900**

OWNER INFORMATION

TOUHEY, DAVID A.
TOUHEY, SUZANNE S.
52 ASH DRIVE

KINGSTON, NH 03848-3350

SALES HISTORY

Date	Book	Page	Type	Price	Grantor
11/18/2004	4396	2889	Q I	249,933	RIVER VALLEY

PICTURE

LISTING HISTORY

01/14/14 KCM
05/13/10 KCML
03/07/05 BW X
04/06/04 SH V

NOTES

CHECK 2005, 3/05 EST UNIT 100%-BW

EXTRA FEATURES VALUATION

Feature Type	Units	Lngth x Width	Size Adj	Rate	Cond	Market Value	Notes
FIREPLACE GAS	1		100	2,500.00	100	2,500	
ASH DR, CONDOS	1		100	32,000.00	100	32,000	
						34,500	

MUNICIPAL SOFTWARE BY AVITAR.

KINGSTON ASSESSING OFFICE

PARCEL TOTAL TAXABLE VALUE

Year	Building	Features	Land
2014	$ 135,400	$ 34,500	$ 0
		Parcel Total: $ 169,900	
2015	$ 135,400	$ 34,500	$ 0
		Parcel Total: $ 169,900	
2016	**$ 135,400**	**$ 34,500**	**$ 0**
		Parcel Total: $ 169,900	

LAND VALUATION

Zone: RRAQ RR W/AQUIFER **Minimum Acreage:** 3.00 **Minimum Frontage:** 200 **Site:** **Driveway:** **Road:**

Land Type	Units	Base Rate	NC	Adj	Site	Road	DWay	Topography	Cond	Ad Valorem	SPI	R	Tax Value	Notes
1F RES	0		E											
	0 ac													

PICTURE

OWNER

TOUHEY, DAVID A.
TOUHEY, SUZANNE S.
52 ASH DRIVE

KINGSTON, NH 03848-3350

TAXABLE DISTRICTS

District	Percentage

PERMITS

Date	Permit ID	Permit Type	Notes
11/01/03	R16-5-5-40	BUILDING	CONDOMINIUM UNIT #40

BUILDING DETAILS

Model: **1.50 STORY FRAME TOWNHOUSE**
Roof: **GABLE HIP/ASPHALT**
Ext: **VINYL SIDING**
Int: **DRYWALL**
Floor: **CARPET/HARDWOOD**
Heat: **GAS/FA DUCTED**
Bedrooms: **1** Baths: **2.0** Fixtures:
Extra Kitchens: Fireplaces:
A/C: **Yes 100.00 %** Generators:
Quality: **A0 AVG**
Com. Wall:
Size Adj: **1.0269** Base Rate: **RCT 84.00**
Bldg. Rate: **1.0064**
Sq. Foot Cost: **$ 84.53**

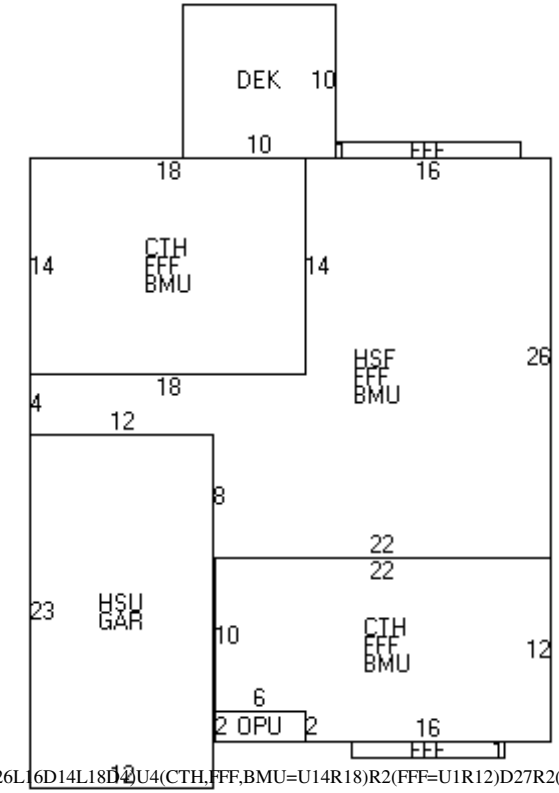

(HSU,GAR=L12U23)(HSF,FFF,BMU=R12D8R22U26L16D14L18D4U4(CTH,FFF,BMU=U14R18)R2(FFF=U1R12)D27R2(CTH,FFF,BMU=D12L16IU2L6U10R22)D12L3(FFF=D1L10)U1L3(OPU=L6U2)U36L2(DEK=R10U10)

BUILDING SUB AREA DETAILS

ID	Description	Area	Adj.	Effect.
HSU	1/2 STRY UNFIN	276	0.25	69
GAR	GARAGE	276	0.45	124
HSF	1/2 STRY FIN	536	0.50	268
FFF	FST FLR FIN	1062	1.00	1062
BMU	BSMNT	1040	0.15	156
CTH	CATHEDRAL	504	0.10	50
OPU	OPEN PORCH	12	0.15	2
DEK	DECK/ENTRANCE	100	0.10	10
GLA:	**1,330**	**3,806**		**1,741**

2013 BASE YEAR BUILDING VALUATION

Market Cost New:		**$ 147,167**
Year Built:		**2004**
Condition For Age:	AVERAGE	**8 %**
Physical:		
Functional:		
Economic:		
Temporary:		
Total Depreciation:		**8 %**
Building Value:		**$ 135,400**